AL 2.1991-84
c. 2

Alberta Department of the Environment
Library

CANADIANA
MAR 20 1986

AMBIENT MONITORING STUDY
CITY OF ST. ALBERT
APRIL 1, 1984 - AUGUST 31, 1984

SUMMARY

This report is a review of results of ambient air monitoring in the City of St. Albert for the period of April 1, 1984 through August 31, 1984.

The monitoring was conducted in response to environmental concerns about a solution gas processing plant located a few kilometers west of the City of St. Albert. The location of the monitoring site was chosen in close consultation with the citizens group.

The results of the air monitoring study, which commenced April 1, 1984, are compared to the maximum permissible concentrations established in the Clean Air (Maximum Levels) Regulations, Part 1, Section (2), (3), and (4).

It is concluded that ambient air concentrations of hydrogen sulphide, sulphur dioxide and nitrogen dioxide were within the Regulation levels 100 percent of the time. In addition the available static station results are within the guideline levels.

TABLE OF CONTENTS

		Page
I	INTRODUCTION	1
II	THE MONITORING SURVEY	2
III	RESULTS OF MONITORING	4
	A. Introduction	4
	B. Sulphur Dioxide	4
	C. Nitrogen Dioxide	4
	D. Hydrogen Sulphide	6
	E. Static Stations	6
IV	METEOROLOGICAL ASSESSMENT	10
V	CONCLUSION	14
VI	APPENDICES	
A1	Monthly Computer-Summarized Monitoring Data	
B1	Static Monitoring Monthly Data	

LIST OF TABLES

Page

Table 1 - SO_2 Concentrations - Comparison to Clean Air (Maximum Levels) Regulation..... 5

Table 2 - NO_2 Concentrations - Comparison to Clean Air (Maximum Levels) Regulation..... 7

Table 3 - H_2S Concentrations - Comparison to Clean Air (Maximum Levels) Regulation..... 8

Table 4 - Static Stations Concentrations - Comparison to Guidelines..... 9

Table 5 - Frequency Distribution of Wind..... 13

LIST OF FIGURES

Page

Figure 1 - Location of Ambient Monitoring Trailer..... 3

Figure 2 - Correlations of SO_2 Readings with wind directions (April 1, 1984 - August 31, 1984)..... 11

Figure 3 - Correlations of H_2S Readings with wind directions (April 1, 1984 - August 31,1984)..... 12

ABBREVIATIONS/DEFINITIONS

Units of Concentration:

ppm - parts per million

ppb* - parts per billion *(1 ppm = 1000 ppb)

Pollutants:

SO_2 - sulphur dioxide

NO_2 - nitrogen dioxide

NO_x - oxides of nitrogen

NO - nitric oxide

H_2S - hydrogen sulphide

Ts - total sulphation

one-hour average - period of time, beginning and ending on the hour (such as 01:00 hours - 02:00 hours) over which pollutant concentration is averaged.

Wind Rose - Graphic presentation of percent of time wind activity was in a specific direction.

I INTRODUCTION

In December 1982, the Energy Resources Conservation Board approved an application by Amoco Canada Petroleum Comapny Ltd. to construct a plant for processing sour solution gas from three batteries in the St. Albert, Big Lake and Morinville fields. The Clean Air Permit was issued in March, 1983. Construction of the plant began in the Fall of 1983. Both the City of St. Albert and its individual citizens expressed concern about the impacts of this facility and on November 16, 1983 a public meeting was held by the ERCB to consider the issues. As a result, a special committee was formed to consider specific concerns of residents, to provide factual information and to initiate a plan for monitoring at appropriate locations within the City of St. Albert. This committee included representatives of the St. Albert City Administration, the St. Albert Concerned Citizens, Amoco, Alberta Environment and the ERCB.

At the first committee meeting in February 1984, it was agreed that two continuous monitoring stations would be set up at locations mutually agreed upon, for a minimum of 6 months. The ERCB was responsible for the first station, which was located in the City Public Works yard on Riel Drive, in the river valley, while Alberta Environment established the second at a site near the hospital. Two static monitoring stations were established. One at the City Public Works yard on Riel Drive, the second at 25 Glenmore Crescent. The gas plant was scheduled for startup in March, 1984; but did not actually commence processing until April 4, 1984.

II THE MONITORING SURVEY

On April 1, 1984 a monitoring trailer was located in the City of St. Albert. Figure 1 illustrates the geographical position of the Amoco Gas Conservation plant relative to St. Albert. The trailer was equipped with monitors to continuously analyze ambient concentrations of SO_2, NO_x, NO, NO_2, and H_2S, and to monitor wind conditions. Data was recorded on continuous inking recorders and stored on computer tapes. Monitoring commenced on April 1, 1984.

Concentrations of pollutants were recorded by the analyzers on a continuous basis and the information was interpreted by computer to produce one-hour average readings of all analyzed pollutants.

To ensure data quality, the monitoring analyzers were calibrated and checked by Alberta Environment staff. Monthly reports of pollutant levels and wind correlations were provided to the St. Albert Concerned Citizens Committee and the ERCB.

Two static monitoring stations were set up to provide trend information on overall total sulphation and H_2S levels. These stations commenced monitoring on March 1, 1984, with data available until June 30, 1984.

After being exposed to the air for a one month period, the static station cylinders are sent to the laboratory for chemical analysis. The raw data calculations are then performed by computer to produce monthly readings.

LEGEND:
GS050 AIR MONITORING STATION
STATIC STATIONS
AMOCO GAS CONSERVATION PLANT
CITY BOUNDARY
ST. ALBERT
GS050
#1
#2
STURGEON RIVER
BIG LAKE
CITY BOUNDARY
Alberta
ENVIRONMENT
Pollution Control Division
Air Quality Control Branch

III RESULTS OF MONITORING

A. Introduction

The results of monitoring for each of the pollutants SO_2, NO_2 and H_2S are examined separately in the following discussion. Included is a monthly comparison of pollutant concentrations to the Clean Air (Maximum Levels) Regulations.

Computer-summarized data by month, is presented in Appendices A1-A5.

B. Sulphur Dioxide

The Clean Air (Maximum Levels) Regulations establish the following levels for ambient sulphur dioxide:

a) 0.17 parts per million (ppm) as a one hour average concentration, and

b) 0.06 parts per million (ppm) as a 24-hour average concentration.

As presented in the summary that follows (Table 1), concentrations of SO_2 were within the one-hour and 24-hour average Regulation levels 100 percent of the time.

C. Nitrogen Dioxide

The parameters of oxides of nitrogen (NO_x) and nitric oxide (NO) were recorded at the St. Albert trailer. The values of nitrogen dioxide were computer-calculated by arithmetic diffrences between NO_x and NO.

The Clean Air (Maximum Levels) Regulations establish the following levels for ambient nitrogen dioxide:

a) 0.21 parts per million (ppm) as a one-hour average concentration, and

TABLE 1

SULPHUR DIOXIDE CONCENTRATIONS
(COMPARISON TO CLEAN (MAXIMUM LEVELS) REGULATIONS)

MONTH	REGULATION LEVEL	% OF READINGS WITHIN REGULATION LEVEL
April, 1984	1-hour average (0.17 ppm)	100.0%
	24-hour average (0.06 ppm)	100.0%
May, 1984	1-hour average (0.17 ppm)	100.0%
	24-hour average (0.06 ppm)	100.0%
June, 1984	1-hour average (0.17 ppm)	100.0%
	24-hour averagw (0.06 ppm)	100.0%
July, 1984	1-hour average (0.17 ppm)	100.0%
	24-hour average (0.06 ppm)	100.0%
August, 1984	1-hour average (0.17 ppm)	100.0%
	24-hour average (0.06 ppm)	100.0%

b) 0.11 parts per million (ppm) as a 24-hour average concentration.

Concentrations of ambient nitrogen dioxide were below Regulation levels 100 percent of the time throughout the monitoring period (Table 2).

D. Hydrogen Sulphide

The Clean Air (Maximum Levels) Regulations establish the level for ambient hydrogen sulphide at 0.010 parts per million (ppm) for one hour.

A review of the table summary that follows (Table 3) indicates that during the survey period the Regulation levels were met 100 percent of the time.

E. Static Stations

Alberta Environment guidelines for total sulphation are 0.50 SO_3 equivalent mg/day100 sq.cm. and for hydrogen sulphide are 0.10 SO_3 equivalent mg/day100 sq.cm.

A review of the table summary that follows (Table 4) indicates that during the survey period the guidelines levels were met 100 percent of the time.

TABLE 2

NITROGEN DIOXIDE CONCENTRATIONS
(COMPARISON TO CLEAN (MAXIMUM LEVELS) REGULATIONS)

MONTH	REGULATION LEVEL	% OF READINGS WITHIN REGULATION LEVEL
April, 1984	1-hour average (0.21 ppm)	100.0%
	24-hour average (0.11 ppm)	100.0%
May, 1984	1-hour average (0.21 ppm)	100.0%
	24-hour average (0.11 ppm)	100.0%
June, 1984	1-hour average (0.21 ppm)	100.0%
	24-hour averagw (0.11 ppm)	100.0%
July, 1984	1-hour average (0.21 ppm)	100.0%
	24-hour average (0.11 ppm)	100.0%
August, 1984	1-hour average (0.21 ppm)	100.0%
	24-hour average (0.11 ppm)	100.0%

TABLE 3

HYDROGEN SULPHIDE CONCENTRATIONS
(COMPARISON TO CLEAN (MAXIMUM LEVELS) REGULATIONS)

MONTH	REGULATION LEVEL	% OF READINGS WITHIN REGULATION LEVEL
April, 1984	1-hour average (10 ppb)	100.0%
May, 1984	1-hour average (10 ppb)	100.0%
June, 1984	1-hour average (10 ppb)	100.0%
July, 1984	1-hour average (10 ppb)	100.0%
August, 1984	1-hour average (10 ppb)	100.0%

TABLE 4

STATIC STATIONS CONCENTRATIONS
(COMPARISON TO ALBERTA ENVIRONMENT GUIDELINES)

MONTH	GUIDELINE* LEVEL	% OF CONCEN-TRATIONS WITHIN GUIDELINES
March, 1984	H_2S - 0.1 T_s** - 0.5	100.00%
April, 1984	H_2S - 0.1 T_s - 0.5	100.00%
May, 1984	H_2S - 0.1 T_s - 0.5	100.00%
June, 1984	H_2S - 0.1 T_s - 0.5	100.00%

*SO_3 Equivalent mg/day/100 sq.cm.
**Total sulphation

IV METEOROLOGICAL ASSESSMENT

An evaluation of the frequency-of-occurrence of pollutant readings while considering wind conditions provides an indication of the predominant wind direction which results in ambient pollutant readings. In flat terrain such correlations may be used to identify sources of a pollutant. When there is topographic releief, such interpretation may be difficult because airflow separation, channeling, or drainage will move the pollutants in a complex fashion.

The following figures present the results of correlations with wind directions of SO_2 (Figures 2) and H_2S (Figure 3) with wind directions over the total survey period; the frequency-of-occurrence of pollutant readings is evaluated against wind directions. All readings for SO_2 and H_2S respectively, were included in this assessment.

Correlations of NO_2 readings with wind directions have not been illustrated because no readings above the baseline concentration of 0.06 ppm for NO_2 were recorded during the survey period.

An examination of Table 5 reveals that west winds predominated throughout the monitoring period, April 1, 1984 to August 31, 1984 and accounted for 21.2 percent of total wind activity. Northwest winds were second in frequency, accounting for 14.6 percent of wind activity during the survey period.

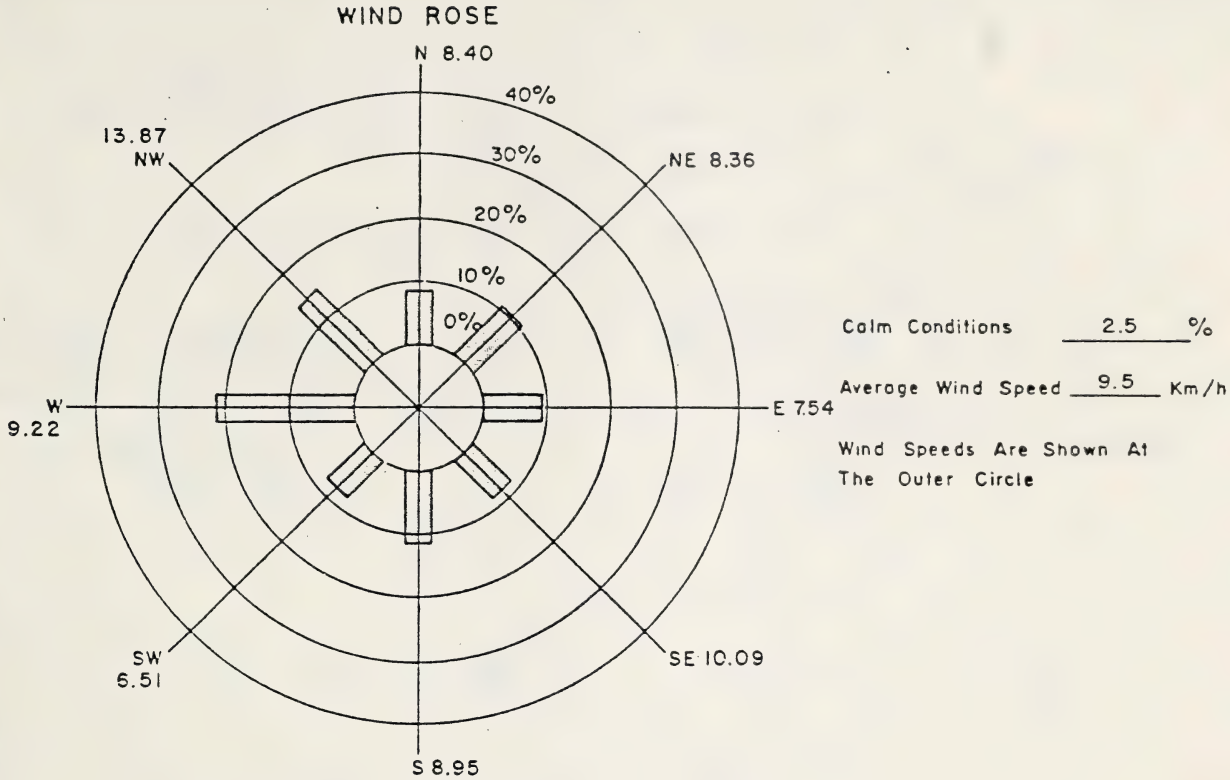

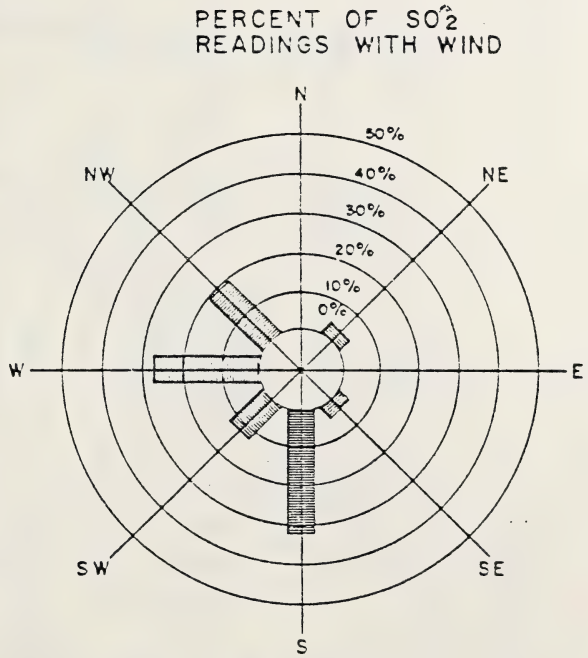

0 % of SO_2 Readings Recorded
With Calm Conditions

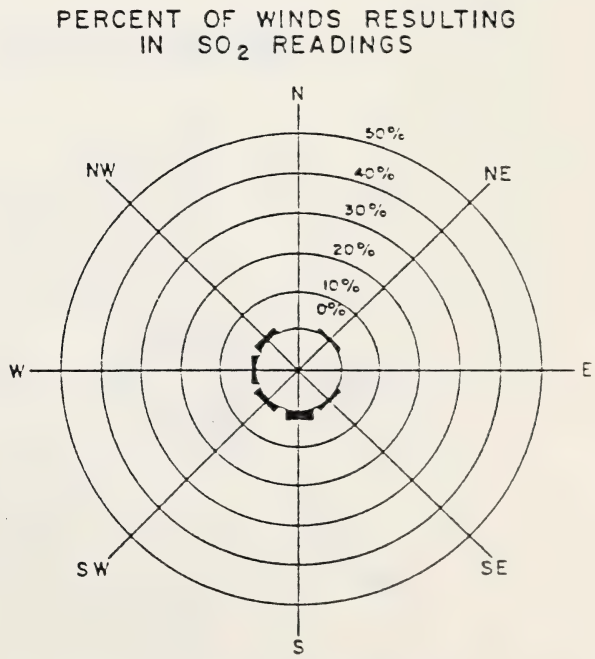

0 % of Calm Winds Resulted
in SO_2 Readings

FIGURE 2 CORRELATION OF SO_2 READINGS WITH WIND DIRECTIONS

Alberta
ENVIRONMENT
Pollution Control Division

WIND ROSE

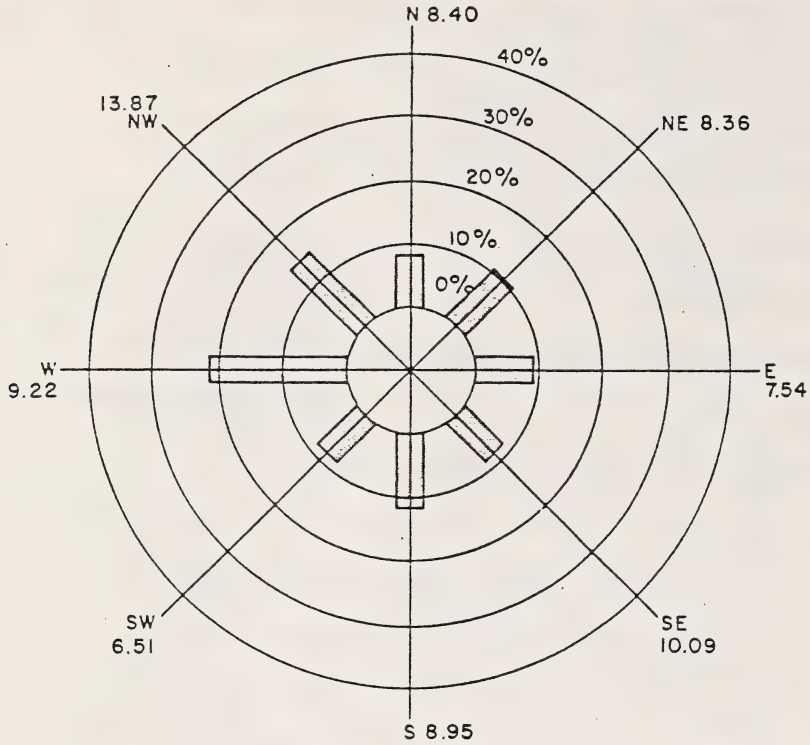

Calm Conditions 2.5 %

Average Wind Speed 9.5 Km/h

Wind Speeds Are Shown At The Outer Circle

PERCENT OF H_2S READINGS WITH WIND

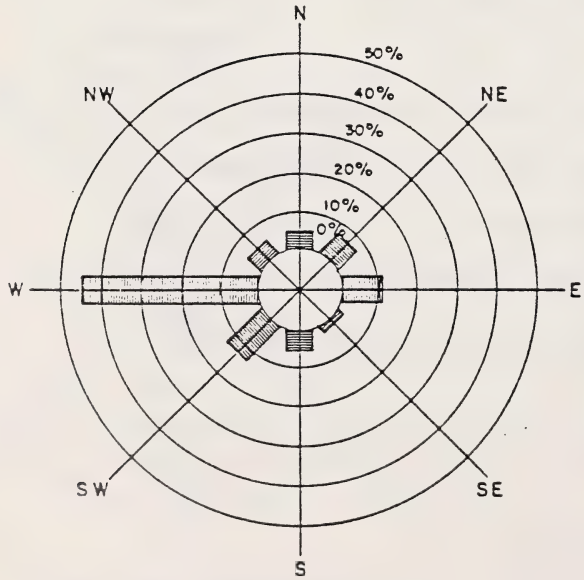

7.25 % of H_2S Readings Recorded With Calm Conditions

PERCENT OF WINDS RESULTING IN H_2S READINGS

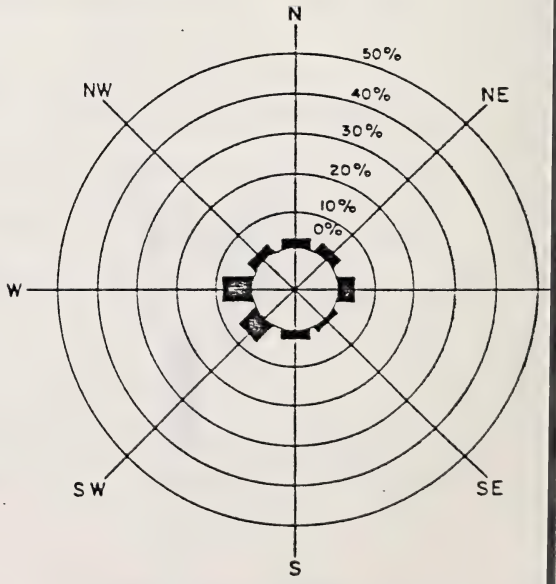

15.18 % of Calm Winds Resulted in H_2S Readings

FIGURE 3 CORRELATION OF H_2S READINGS WITH WIND DIRECTIONS

Alber
ENVIRON
Pollution Control D
Air Quality Control E

FREQUENCY DISTRIBUTION OF WIND

MONITORING PERIOD		CALM	N	NE	E	SE	S	SW	W	NW
APRIL	1984	4.86	2.92	15.42	6.25	5.42	20.69	13.47	5.69	12.78
May	1984	0.0	13.58	10.22	8.74	14.25	8.33	4.30	16.40	10.89
June	1984	0.56	11.53	9.72	12.36	8.75	7.78	10.83	23.19	15.28
July	1984	5.24	6.05	10.08	11.56	7.80	9.27	7.39	25.67	16.94
August	1984	1.88	9.68	6.45	9.81	6.72	12.10	11.16	25.67	16.53
Weighted Averages:		2.51	8.79	10.22	9.87	8.53	11.46	8.03	21.23	14.64

April 1, 1984 to
August 31,1984

V CONCLUSION

The purpose of the ambient monitoring study in St. Albert was to determine the quality of the ambient air in the community after the Amoco gas conservation plant became operational.

Based on the results of monitoring, concentrations of H_2S, SO_2 and NO_2 were within Regulation levels 100 percent of the time, and the total sulphation and hydrogen sulphide static station results were within the guideline levels.

APPENDIX A1

Monthly Computer-Summarized Monitoring Data

ALBERTA ENVIRONMENT
DIVISION OF POLLUTION CONTROL
AIR QUALITY CONTROL BRANCH

WIND FREQUENCY TABLE

STATION: ST ALBERT S050

MONTH: APR. 1984

INSTRUMENT TYPE: ATHABASCA RES.

DIRECTION	DEGREES	TOTAL HOURS	PERCENT	AVERAGE SPEED IN KM/H
N	338 TO 22	21	2.92	7.6
NE	23 TO 67	111	15.42	8.8
E	68 TO 112	45	6.25	7.2
SE	113 TO 157	39	5.42	8.1
S	158 TO 202	149	20.69	10.7
SW	203 TO 247	41	5.69	7.4
W	248 TO 292	97	13.47	8.6
NW	293 TO 337	92	12.78	13.6
CALM	0 TO 000	35	4.86	

AVERAGE WIND SPEED 9.7 KM/H

WIND INSTRUMENT OPERATIONAL 630 HOURS (87.50%)

AMBIENT AIR MONITORING REPORT FOR THE MONTH OF APR. 1984

STATION: ST ALBER S050

POLLUTANT	MONITOR	RANGE MAX.	PEAK HOURLY	PEAK DAILY	MONTH MEAN	% OPER
NOX		PPM	0.20	0.09	0.03	99.0
NO		PPM	0.20	0.09	0.02	99.0
NO2		PPM	0.04	0.02	0.00	99.0
SO2		PPM	0.00	0.00	0.00	99.9
H2S		PPB	3.0	0.63	0.02	99.9

@ NOTE CARBON MONOXIDE CONTAINS PEAK 8-HR AVERAGE INSTEAD OF PEAK DAILY AVERAGE

S050 APR. 84

COMPARISON TO CLEAN AIR (MAXIMUM LEVELS) REGULATION

POLLUTANT	REGULATIONS		NO.IN EXCESS OF REGULATION	% OF TIME PER MONTH THAT REG. WAS EXCEEDED
NO2	1-HOUR	0.21 PPM	0	0.0
	24-HOUR	0.11 PPM	0	0.0
SO2	1-HOUR	0.17 PPM	0	0.0
	24-HOUR	0.06 PPM	0	0.0
H2S	1-HOUR	10.00 PPB	0	0.0
	24-HOUR	3.00 PPB	0	0.0

NOTE. COMPARISON TO 8-HOUR REGULATION WAS WITH TIME PERIODS 0001 - 8
0801 - 1600 AND 1601 - 2400

NOTE. COMPARISON TO 24-HOUR REGULATION WAS ON A CALENDAR DAY BASIS N

NOTE. OTHER POLLUTANTS NOT SPECIFIED IN THE CLEAN AIR (MAXIMUM LEVE S
REGULATIONS

S050 APR. 84

WIND DIRECTION AND WIND SPEED (KM/H)

DAY	1	2	3	4	5	6	7	8	9	10	11	12	13	14	15	16	17	18	19	20	21	22	23
1	S	S	S	S	S	S	S	S	S	S	S	S	S	S	**	**	**	**	**	**	**	**	**
	9	9	9	9	9	9	10	10	10	14	18	18	18	18	**	**	**	**	**	**	**	**	**
2	**	SW	SW	SW	SW	SW	SW	SW	SW	SW	SW	SW	SW	SW	SW	SW	SW	SW	SW	S	S	SE	S
	**	7	7	7	7	7	7	3	3	7	10	10	14	10	10	10	10	10	7	7	7	7	7
3	S	S	S	S	S	S	S	S	S	S	S	S	**	S	S	S	S	SE	SE	SE	SE	SE	SE
	7	7	5	5	5	5	5	5	7	10	10	14	**	14	10	10	10	10	7	7	3	7	10
4	SE	SE	S	S	S	SW	SW	W	W	NW	NW	NW	NW	NW	NW	W	W	W	NW	NE	NE	E	E
	10	7	7	7	3	3	3	7	7	14	14	14	14	10	10	10	7	7	3	5	5	5	3
5	E	E	E	E	E	E	**	**	**	**	**	**	**	**	**	**	**	**	**	**	**	**	**
	7	7	7	7	7	7	**	**	**	**	**	**	**	**	**	**	**	**	**	**	**	**	**
6	**	**	**	**	**	**	**	**	**	**	NE	NE	NE	NE	NE	NE	NE	W	W	W	W	W	W
	**	**	**	**	**	**	**	**	**	**	9	9	10	10	14	10	10	14	21	18	18	14	14
7	W	W	W	W	W	W	W	W	W	W	W	W	W	W	W	W	W	W	SW	S	SE	E	E
	10	10	10	9	7	7	7	7	9	10	7	10	10	14	10	14	10	5	5	5	5	5	5
8	W	W	W	W	W	W	W	W	W	W	W	W	W	NW	NW	N	N	NW	NW	NW	N	N	NW
	5	5	5	5	5	7	9	7	7	7	7	7	10	10	7	7	7	9	9	10	9	7	5
9	W	W	W	W	W	W	W	W	W	SW	W	SW	SW	SW	W	S	**	**	**	**	**	**	**
	5	3	3	5	5	5	5	7	9	9	7	7	7	7	7	7	**	**	**	**	**	**	**
10	**	**	**	**	**	**	**	**	**	**	NE	S	S	SE	SE	E	SE	SW	N	N	N	NE	NE
	**	**	**	**	**	**	**	**	**	**	7	7	7	7	10	10	7	3	3	7	7	7	3
11	W	NE	W	W	W	W	W	W	W	W	NW	**	**	**	**	**	**	**	**	**	**	**	**
	3	7	7	7	7	7	7	7	10	10	14	**	**	**	**	**	**	**	**	**	**	**	**
12	**	**	**	**	**	**	**	**	**	**	**	S	S	S	S	S	S	S	S	SE	SE	S	S
	**	**	**	**	**	**	**	**	**	**	**	9	9	10	10	10	10	7	7	7	10	7	7
13	SE	E	NE	NE	NE	NE	NE	SW	W	NW	NW	NW	NW	NW	W	W	SW	SW	NE	E	E	SE	SE
	7	7	7	3	3	3	3	3	7	7	7	7	7	7	7	7	10	7	3	3	3	7	7
14	S	S	S	S	S	S	S	S	S	S	S	S	S	S	S	S	S	S	S	S	S	S	S
	7	10	10	10	10	10	10	14	14	14	14	14	18	18	18	14	14	14	14	10	10	10	10
15	S	S	S	S	S	S	S	S	S	S	S	S	S	S	S	S	S	S	S	S	S	S	S
	10	10	14	14	10	10	10	10	10	10	18	18	21	25	21	25	21	21	21	21	21	18	18
16	**	**	**	**	**	**	**	**	N	NE	NE	NE	E	E	S	S	E	NW	NW	NW	NW	NW	NW
	**	**	**	**	**	**	**	**	5	10	18	18	10	7	7	7	10	21	21	18	21	25	18
17	NW	NW	NW	W	W	W	NW	NW	NW	N	N	N	NW	NW	NW	NW	NW	NW	NE	NE	NE	NE	NE
	10	7	7	7	14	14	14	14	18	18	14	10	14	14	14	10	10	10	10	10	7	7	7
18	NE	NE	NE	NE	NE	NE	NE	NE	NE	E	E	E	E	NE	NE	NE	NE	NE	NE	NE	NE	NE	NE
	7	7	7	7	10	10	10	10	14	10	10	10	10	10	14	10	10	10	10	14	14	10	10
19	NE	C	C	C	C	C	C	N	N	N	N	N	N	NE	N	W	NW	NE	NE	NE	NE	NE	NE
	7	0	0	0	0	0	0	7	7	7	7	7	7	7	7	7	7	7	7	7	7	7	7
20	NE	NE	C	C	C	C	N	N	NE	S	S	S	S	S	S	S	S	S	S	S	S	S	S
	7	7	0	0	0	0	3	3	3	7	7	10	14	18	18	18	18	18	18	18	10	14	14
21	S	S	S	S	S	S	S	SW	W	W	W	W	W	W	W	SW	SW	SW	NW	NW	NW	NW	NW
	10	7	7	7	7	7	7	7	7	7	7	7	7	7	10	10	10	10	10	10	7	10	14
22	NW	NW	NW	NW	NW	NW	NW	NW	NW	NW	NW	NW	NW	NW	SW	SW	SW	NW	S	NW	NW	S	S
	18	18	18	18	18	18	18	18	18	18	18	18	14	10	10	10	10	10	10	10	10	10	7
23	NW	S	S	S	S	S	S	NW	NW	NW	NW	NW	NW	NW	NW	NW	NW	NW	NW	NW	NW	W	W
	7	7	7	7	7	7	7	18	18	18	18	18	18	18	18	18	18	18	18	18	10	10	14
24	NW	NW	NW	NW	NW	SW	W	W	NW	NW	NW	NW	W	W	W	W	W	W	W	W	W	NW	NW
	18	18	18	18	10	7	7	10	18	18	14	14	14	14	14	14	10	10	10	7	7	10	10
25	NW	NE	NE	NE	NE	NE	NE	NE	NE	NE	NE	C	C	C	C	C	C	C	C	C	C	C	C
	7	10	10	10	10	10	14	18	18	18	18	0	0	0	0	0	0	0	0	0	0	0	0
26	NE	NE	C	C	NE	NE	NE	NE	E	E	E	NE	NE	NE	NE	NE	NE	NE	NE	NE	NE	NE	NE
	10	9	0	0	7	7	7	10	10	7	7	10	10	10	10	10	10	10	10	10	10	10	7
27	C	C	C	C	C	C	C	W	W	W	W	NW	W	W	SW	S	S	SE	SE	SE	SE	SE	SE
	0	0	0	0	0	0	0	3	5	7	7	7	7	7	7	7	7	7	7	7	7	7	7
28	S	S	S	S	NE	C	NE	E	E	NE	NE	NE	NE	NE	C	E	E	NE	NE	NE	N	C	NE
	3	3	3	3	3	0	3	7	7	7	9	9	10	14	0	14	14	14	10	7	10	0	10
29	NE	NE	NE	NE	NE	NE	NE	NE	S	S	E	E	E	E	E	E	E	E	E	NE	E	E	E
	7	7	7	7	7	7	1	1	5	5	7	7	7	7	7	7	7	7	7	7	7	7	7
30	E	E	SW	S	S	SE	E	S	S	S	S	SE	SE	SE	S	SE	SE	SE	SE	SE	SE	SE	SE
	5	3	3	3	3	3	3	3	7	7	10	10	10	10	10	10	10	10	10	10	10	10	10

OXIDES OF NITROGEN - NOX S050

PPM ONE HOUR AVERAGE

MONTH APR. 84

DAY	0001-0800 AVE.	NO.	0801-1600 AVE.	NO.	1601-2400 AVE.	NO.	FULL DAY AVE.	NO.	DAILY PEAK
1	0.02	8	0.02	8	0.02	8	0.02	24	0.03
2	0.03	8	0.02	8	0.05	8	0.03	24	0.12
3	0.02	8	0.04	3	0.03	8	0.03	19	0.05
4	0.03	8	0.03	8	0.04	8	0.03	24	0.06
5	0.03	8	0.02	8	0.05	8	0.03	24	0.08
6	0.05	8	0.04	8	0.09	8	0.06	24	0.11
7	0.14	8	0.09	8	0.05	8	0.09	24	0.20
8	0.07	8	0.08	8	0.05	8	0.07	24	0.10
9	0.07	8	0.08	8	0.04	8	0.07	24	0.10
10	0.05	8	0.05	8	0.04	8	0.05	24	0.07
11	0.06	8	0.09	8	0.09	8	0.08	24	0.10
12	0.01	8	0.02	7	0.01	8	0.02	23	0.04
13	0.03	8	0.03	8	0.03	8	0.03	24	0.06
14	0.01	8	0.02	8	0.01	8	0.01	24	0.03
15	0.03	8	0.03	8	0.01	8	0.02	24	0.05
16	0.01	8	0.01	8	0.01	8	0.01	24	0.01
17	0.01	8	0.01	8	0.01	8	0.01	24	0.04
18	0.01	8	0.01	8	0.01	8	0.01	24	0.01
19	0.00	8	0.02	8	0.01	8	0.01	24	0.02
20	0.01	8	0.01	8	0.01	8	0.01	24	0.02
21	0.00	8	0.01	8	0.00	8	0.01	24	0.01
22	0.01	8	0.02	8	0.01	8	0.01	24	0.03
23	0.01	8	0.01	8	0.01	8	0.01	24	0.01
24	0.01	8	0.00	8	0.01	8	0.01	24	0.01
25	0.00	8	0.01	7	0.00	8	0.00	23	0.02
26	0.02	8	0.01	8	0.00	8	0.01	24	0.04
27	0.01	8	0.02	8	0.01	8	0.01	24	0.03
28	0.02	8	0.03	8	0.01	8	0.02	24	0.04
29	0.00	8	0.00	8	0.01	8	0.01	24	0.01
30	0.01	8	0.01	8	0.00	8	0.01	24	0.02

SUMMARY OF PEAK READINGS, PEAK AVERAGES, MONTHLY STATS

PEAK HOURLY READING 0.20 ON DAY 7 301 - 400 HOURS

WIND READINGS HOUR BEFORE/DURING /AFTER PEAK HOURLY READING

W 10 / W 9 / W 7

PEAK CALENDAR DAY AVG. 0.09 ON DAY 7

ARITHMETIC MEAN 0.03 NO. RDGS. 713 HRS. (%OPER. 99.03%)

POLLUTANT NOT SPECIFIED IN THE CLEAN AIR (MAXIMUM LEVELS) REGULATIONS

FREQUENCY DISTRIBUTION

RANGE	NO.OF RDGS.	PERCENT	CUMULATIVE
0.0 - 0.000	95	13.3	13.3
0.001 - 0.110	609	85.4	98.7
0.111 - 0.210	9	1.3	100.0
0.211 - 0.420	0	0.0	100.0
0.421 OR OVER	0	0.0	100.0

ALL MEANS ARE ARITHMETIC UNLESS OTHERWISE SPECIFIED

OXIDES OF NITROGEN - NOX S050

PPM ONE HOUR AVERAGE

MONTH APR. 84

DAY	1	2	3	4	5	6	7	8	9	10	11	12
1	0.02	0.02	0.02	0.02	0.02	0.02	0.02	0.02	0.02	0.03	0.03	0.0
2	0.02	0.02	0.02	0.02	0.03	0.03	0.04	0.04	0.03	0.02	0.02	0.0
3	0.02	0.02	0.02	0.02	0.02	0.02	0.02	0.03	0.04	0.05	*****	****
4	0.04	0.03	0.03	0.04	0.04	0.03	0.03	0.03	0.03	0.03	0.03	0.0
5	0.04	0.03	0.03	0.03	0.02	0.03	0.04	0.03	0.02	0.01	0.02	0.0
6	0.05	0.04	0.04	0.05	0.05	0.06	0.07	0.06	0.04	0.04	0.04	0.0
7	0.08	0.09	0.19	0.20	0.17	0.15	0.14	0.13	0.13	0.12	0.10	0.1
8	0.07	0.07	0.07	0.07	0.08	0.08	0.08	0.08	0.10	0.10	0.10	0.0
9	0.06	0.07	0.07	0.05	0.09	0.08	0.09	0.09	0.10	0.10	0.08	0.0
10	0.04	0.05	0.05	0.05	0.06	0.06	0.06	0.07	0.07	0.06	0.06	0.0
11	0.06	0.06	0.05	0.05	0.07	0.07	0.08	0.08	0.08	0.09	0.10	0.0
12	0.00	0.00	0.00	0.04	0.02	0.01	0.01	0.02	0.02	0.04	*****	0.0
13	0.01	0.03	0.01	0.06	0.02	0.02	0.02	0.04	0.04	0.04	0.03	0.0
14	0.01	0.01	0.01	0.01	0.01	0.02	0.02	0.02	0.02	0.02	0.02	0.0
15	0.01	0.02	0.02	0.02	0.02	0.03	0.05	0.04	0.04	0.04	0.03	0.0
16	0.01	0.01	0.01	0.01	0.01	0.01	0.01	0.01	0.01	0.01	0.01	0.0
17	0.01	0.00	0.01	0.01	0.01	0.02	0.00	0.01	0.00	0.00	0.00	0.0
18	0.01	0.01	0.01	0.01	0.01	0.01	0.01	0.01	0.01	0.01	0.01	0.0
19	0.01	0.01	0.01	0.00	0.00	0.00	0.00	0.00	0.01	0.02	0.02	0.0
20	0.01	0.00	0.00	0.00	0.01	0.01	0.01	0.01	0.01	0.01	0.01	0.0
21	0.00	0.00	0.01	0.00	0.00	0.00	0.01	0.01	0.01	0.01	0.01	0.0
22	0.01	0.01	0.01	0.00	0.00	0.00	0.01	0.01	0.02	0.02	0.03	0.0
23	0.01	0.01	0.01	0.01	0.01	0.01	0.01	0.01	0.01	0.01	0.01	0.0
24	0.01	0.01	0.01	0.01	0.01	0.01	0.01	0.00	0.00	0.00	0.00	0.0
25	0.00	0.00	0.00	0.00	0.00	0.00	0.00	0.00	*****	0.00	0.01	0.0
26	0.02	0.02	0.02	0.03	0.04	0.03	0.02	0.02	0.01	0.02	0.02	0.0
27	0.01	0.01	0.01	0.01	0.01	0.01	0.01	0.01	0.01	0.02	0.02	0.0
28	0.01	0.01	0.02	0.01	0.02	0.03	0.03	0.03	0.03	0.04	0.04	0.0
29	0.00	0.00	0.00	0.00	0.00	0.01	0.01	0.01	0.01	0.01	0.00	0.0
30	0.01	0.01	0.01	0.01	0.01	0.01	0.02	0.02	0.02	0.02	0.02	0.0

DAY	13	14	15	16	17	18	19	20	21	22	23	24
1	0.03	0.02	0.02	0.02	0.02	0.03	0.03	0.03	0.02	0.02	0.02	0.0
2	0.02	0.02	0.02	0.02	0.02	0.02	0.03	0.05	0.06	0.12	0.05	0.0
3	*****	*****	*****	0.03	0.03	0.03	0.04	0.05	0.04	0.03	0.03	0.0
4	0.03	0.03	0.03	0.03	0.03	0.02	0.03	0.04	0.04	0.04	0.06	0.0
5	0.03	0.03	0.03	0.04	0.03	0.03	0.03	0.04	0.08	0.06	0.06	0.0
6	0.04	0.04	0.04	0.05	0.11	0.11	0.08	0.08	0.08	0.08	0.08	0.0
7	0.08	0.07	0.06	0.05	0.05	0.06	0.05	0.05	0.05	0.05	0.05	0.0
8	0.08	0.07	0.06	0.05	0.05	0.04	0.04	0.05	0.05	0.06	0.06	0.0
9	0.07	0.07	0.07	0.06	0.05	0.05	0.05	0.05	0.04	0.04	0.04	0.0
10	0.05	0.05	0.05	0.04	0.04	0.04	0.04	0.04	0.04	0.05	0.05	0.0
11	0.09	0.09	0.08	0.09	0.08	0.08	0.08	0.08	0.10	0.10	0.10	0.1
12	0.02	0.02	0.02	0.02	0.02	0.02	0.02	0.02	0.01	0.01	0.01	0.0
13	0.02	0.02	0.02	0.02	0.01	0.01	0.01	0.03	0.04	0.05	0.06	0.0
14	0.02	0.01	0.01	0.01	0.01	0.01	0.01	0.01	0.01	0.01	0.01	0.0
15	0.03	0.02	0.02	0.02	0.01	0.00	0.00	0.00	0.01	0.01	0.01	0.0
16	0.01	0.01	0.01	0.01	0.01	0.01	0.01	0.01	0.01	0.01	0.01	0.0
17	0.01	0.02	0.04	0.03	0.02	0.01	0.01	0.01	0.01	0.01	0.01	0.0
18	0.01	0.01	0.01	0.01	0.01	0.01	0.01	0.01	0.01	0.01	0.01	0.0
19	0.02	0.02	0.02	0.01	0.01	0.01	0.01	0.01	0.01	0.01	0.01	0.0
20	0.02	0.01	0.01	0.01	0.01	0.01	0.01	0.01	0.01	0.02	0.01	0.0
21	0.01	0.00	0.01	0.01	0.01	0.01	0.00	0.00	0.00	0.00	0.00	0.0
22	0.02	0.02	0.01	0.02	0.01	0.01	0.01	0.01	0.01	0.01	0.01	0.0
23	0.01	0.01	0.01	0.01	0.01	0.01	0.01	0.01	0.01	0.01	0.01	0.0
24	0.00	0.00	0.00	0.00	0.00	0.01	0.01	0.01	0.01	0.01	0.01	0.0
25	0.01	0.01	0.01	0.01	0.00	0.00	0.00	0.00	0.00	0.00	0.01	0.0
26	0.01	0.01	0.01	0.00	0.00	0.00	0.00	0.00	0.00	0.00	0.01	0.0
27	0.03	0.03	0.03	0.02	0.02	0.01	0.01	0.00	0.01	0.01	0.01	0.0
28	0.03	0.02	0.02	0.01	0.00	0.00	0.00	0.00	0.00	0.01	0.03	0.0
29	0.00	0.00	0.00	0.00	0.00	0.01	0.01	0.01	0.01	0.01	0.01	0.0
30	0.01	0.01	0.00	0.00	0.00	0.00	0.00	0.00	0.00	0.00	0.00	0.0

OXIDES OF NITROGEN - NOX S050

FREQUENCY DISTRIBUTION TABLES

MONTH APR. 84

PERCENT OF READINGS WITH WIND DIRECTION

WIND DIRECTION	POLLUTANT OCC. HOURS	FREQUENCY OF OCCURRENCE %
N	4	2.9
NE	7	5.1
E	4	2.9
SE	7	5.1
S	9	6.6
SW	6	4.4
W	58	42.3
NW	6	4.4
CALM	0	0.0
INOP	36	26.3

FREQUENCY OF READINGS WITH WIND DIRECTION

WIND DIRECTION	HOURS OF WIND OCCURRENCE	HOURS OF READINGS	FREQUENCY OF READINGS WITH WIND
N	21	4	19.0
NE	110	7	6.4
E	45	4	8.9
SE	39	7	17.9
S	145	9	6.2
SW	41	6	14.6
W	97	58	59.8
NW	92	6	6.5
CALM	35	0	0.0
INOP	88	36	40.9

NOTE.1. READINGS CONSIDERED IN FREQUENCY DISTRIBUTION TABLES ARE THOSE GREATER THAN 0.0500 PPM

2. VALUE OF ****** INDICATES NO DATA AVAILABLE OR INSUFFICIENT DATA

3. WIND DATA UTILIZED FOR CORRELATION PURPOSES WAS MONITORED AT ST. ALBERT S050

OXIDES OF NITROGEN - NO S050

PPM ONE HOUR AVERAGE

MONTH APR. 84

DAY	0001-0800 AVE.	NO.	0801-1600 AVE.	NO.	1601-2400 AVE.	NO.	FULL DAY AVE.	NO.	DAILY PEAK
1	0.01	8	0.02	8	0.01	8	0.01	24	0.02
2	0.01	8	0.01	8	0.02	8	0.02	24	0.08
3	0.01	8	0.03	3	0.02	8	0.02	19	0.04
4	0.02	8	0.02	8	0.03	8	0.02	24	0.03
5	0.02	8	0.02	8	0.03	8	0.02	24	0.05
6	0.04	8	0.03	8	0.09	8	0.05	24	0.11
7	0.14	8	0.09	8	0.04	8	0.09	24	0.20
8	0.07	8	0.08	8	0.05	8	0.07	24	0.10
9	0.07	8	0.08	8	0.04	8	0.07	24	0.10
10	0.05	8	0.05	8	0.04	8	0.05	24	0.07
11	0.06	8	0.09	8	0.08	8	0.08	24	0.10
12	0.01	8	0.02	7	0.01	8	0.02	23	0.04
13	0.03	8	0.03	8	0.03	8	0.03	24	0.06
14	0.01	8	0.02	8	0.01	8	0.01	24	0.03
15	0.02	8	0.03	8	0.01	8	0.02	24	0.04
16	0.01	8	0.01	8	0.01	8	0.01	24	0.01
17	0.01	8	0.01	8	0.01	8	0.01	24	0.03
18	0.01	8	0.01	8	0.01	8	0.01	24	0.01
19	0.00	8	0.02	8	0.01	8	0.01	24	0.02
20	0.01	8	0.01	8	0.01	8	0.01	24	0.02
21	0.00	8	0.01	8	0.00	8	0.01	24	0.01
22	0.01	8	0.02	8	0.01	8	0.01	24	0.03
23	0.01	8	0.01	8	0.01	8	0.01	24	0.01
24	0.01	8	0.00	8	0.01	8	0.01	24	0.01
25	0.00	8	0.01	7	0.00	8	0.00	23	0.02
26	0.02	8	0.01	8	0.00	8	0.01	24	0.04
27	0.01	8	0.02	8	0.01	8	0.01	24	0.03
28	0.02	8	0.03	8	0.01	8	0.02	24	0.04
29	0.00	8	0.00	8	0.01	8	0.01	24	0.01
30	0.01	8	0.01	8	0.00	8	0.01	24	0.02

SUMMARY OF PEAK READINGS, PEAK AVERAGES, MONTHLY STATS

PEAK HOURLY READING 0.20 ON DAY 7 301 - 400 HOURS

WIND READINGS HOUR BEFORE/DURING /AFTER PEAK HOURLY READING

W 10 / W 9 / W 7

PEAK CALENDAR DAY AVG. 0.09 ON DAY 7

ARITHMETIC MEAN 0.02 NO. RDGS. 713 HRS. (%OPER. 99.03%)

POLLUTANT NOT SPECIFIED IN THE CLEAN AIR (MAXIMUM LEVELS) REGULATIONS

FREQUENCY DISTRIBUTION

RANGE	NO.OF RDGS.	PERCENT	CUMULATIVE
0.0 - 0.000	95	13.3	13.3
0.001 - 0.110	610	85.6	98.9
0.111 - 0.210	8	1.1	100.0
0.211 - 0.420	0	0.0	100.0
0.421 OR OVER	0	0.0	100.0

ALL MEANS ARE ARITHMETIC UNLESS OTHERWISE SPECIFIED

OXIDES OF NITROGEN - NO S050

PPM ONE HOUR AVERAGE

MONTH APR. 84

DAY	1	2	3	4	5	6	7	8	9	10	11
1	0.01	0.01	0.01	0.01	0.01	0.01	0.01	0.01	0.02	0.02	0.02
2	0.01	0.01	0.01	0.01	0.01	0.01	0.01	0.02	0.03	0.02	0.01
3	0.01	0.01	0.01	0.01	0.01	0.02	0.02	0.03	0.04	0.04	*****
4	0.02	0.02	0.02	0.02	0.03	0.03	0.03	0.03	0.03	0.02	0.02
5	0.02	0.02	0.02	0.01	0.01	0.02	0.02	0.02	0.01	0.01	0.01
6	0.04	0.03	0.03	0.04	0.04	0.05	0.06	0.05	0.03	0.03	0.03
7	0.08	0.09	0.19	0.20	0.17	0.15	0.14	0.13	0.13	0.12	0.10
8	0.06	0.06	0.06	0.06	0.07	0.08	0.08	0.08	0.10	0.10	0.10
9	0.06	0.07	0.07	0.05	0.09	0.08	0.09	0.09	0.10	0.10	0.08
10	0.04	0.05	0.05	0.05	0.06	0.06	0.06	0.07	0.07	0.06	0.06
11	0.06	0.06	0.05	0.05	0.07	0.07	0.08	0.08	0.08	0.09	0.10
12	0.00	0.00	0.00	0.04	0.02	0.01	0.01	0.02	0.02	0.03	*****
13	0.01	0.03	0.01	0.06	0.02	0.02	0.02	0.04	0.04	0.04	0.03
14	0.01	0.01	0.01	0.01	0.01	0.02	0.02	0.02	0.02	0.02	0.02
15	0.01	0.02	0.02	0.02	0.02	0.03	0.04	0.03	0.04	0.04	0.03
16	0.01	0.01	0.01	0.01	0.01	0.01	0.01	0.01	0.01	0.01	0.01
17	0.01	0.00	0.01	0.01	0.01	0.02	0.00	0.01	0.00	0.00	0.00
18	0.01	0.01	0.01	0.01	0.01	0.01	0.01	0.01	0.01	0.01	0.01
19	0.01	0.01	0.01	0.00	0.00	0.00	0.00	0.00	0.01	0.02	0.02
20	0.01	0.00	0.00	0.00	0.01	0.01	0.01	0.01	0.01	0.01	0.01
21	0.00	0.00	0.01	0.00	0.00	0.00	0.01	0.01	0.01	0.01	0.01
22	0.01	0.01	0.01	0.00	0.00	0.00	0.01	0.01	0.02	0.02	0.03
23	0.01	0.01	0.01	0.01	0.01	0.01	0.01	0.01	0.01	0.01	0.01
24	0.01	0.01	0.01	0.01	0.01	0.01	0.01	0.00	0.00	0.00	0.00
25	0.00	0.00	0.00	0.00	0.00	0.00	0.00	0.00	*****	0.00	0.01
26	0.02	0.02	0.02	0.03	0.04	0.03	0.02	0.02	0.01	0.02	0.02
27	0.01	0.01	0.01	0.01	0.01	0.01	0.01	0.01	0.01	0.02	0.02
28	0.01	0.01	0.02	0.01	0.02	0.03	0.03	0.03	0.03	0.04	0.04
29	0.00	0.00	0.00	0.00	0.00	0.01	0.01	0.01	0.01	0.01	0.00
30	0.01	0.01	0.01	0.01	0.01	0.01	0.02	0.02	0.02	0.02	0.02

DAY	13	14	15	16	17	18	19	20	21	22	23
1	0.02	0.02	0.01	0.01	0.01	0.01	0.01	0.01	0.01	0.01	0.01
2	0.01	0.01	0.01	0.01	0.01	0.01	0.01	0.02	0.03	0.08	0.03
3	*****	*****	*****	0.02	0.01	0.02	0.02	0.03	0.01	0.01	0.02
4	0.02	0.02	0.02	0.02	0.02	0.02	0.02	0.03	0.03	0.03	0.03
5	0.02	0.03	0.03	0.03	0.02	0.02	0.02	0.03	0.05	0.04	0.04
6	0.03	0.03	0.03	0.04	0.11	0.11	0.08	0.08	0.08	0.08	0.08
7	0.08	0.07	0.06	0.05	0.04	0.05	0.04	0.04	0.04	0.04	0.04
8	0.08	0.07	0.06	0.05	0.05	0.04	0.04	0.05	0.05	0.06	0.06
9	0.07	0.07	0.07	0.06	0.05	0.05	0.05	0.05	0.04	0.04	0.04
10	0.05	0.05	0.05	0.04	0.04	0.04	0.04	0.04	0.04	0.05	0.05
11	0.09	0.09	0.08	0.08	0.07	0.07	0.07	0.07	0.09	0.09	0.09
12	0.02	0.02	0.02	0.02	0.02	0.02	0.02	0.02	0.01	0.01	0.01
13	0.02	0.02	0.02	0.02	0.01	0.01	0.01	0.03	0.04	0.05	0.06
14	0.02	0.01	0.01	0.01	0.01	0.01	0.01	0.01	0.01	0.01	0.01
15	0.03	0.02	0.02	0.02	0.01	0.00	0.00	0.00	0.01	0.01	0.01
16	0.01	0.01	0.01	0.01	0.01	0.01	0.01	0.01	0.01	0.01	0.01
17	0.01	0.01	0.03	0.03	0.02	0.01	0.01	0.01	0.01	0.01	0.01
18	0.01	0.01	0.01	0.01	0.01	0.01	0.01	0.01	0.01	0.01	0.01
19	0.02	0.02	0.02	0.01	0.01	0.01	0.01	0.01	0.01	0.01	0.01
20	0.02	0.01	0.01	0.01	0.01	0.01	0.01	0.01	0.01	0.02	0.01
21	0.01	0.00	0.01	0.01	0.01	0.01	0.00	0.00	0.00	0.00	0.00
22	0.02	0.02	0.01	0.02	0.01	0.01	0.01	0.01	0.01	0.01	0.01
23	0.01	0.01	0.01	0.01	0.01	0.01	0.01	0.01	0.01	0.01	0.01
24	0.00	0.00	0.00	0.00	0.00	0.01	0.01	0.01	0.01	0.01	0.01
25	0.01	0.01	0.01	0.01	0.00	0.00	0.00	0.00	0.00	0.00	0.01
26	0.01	0.01	0.01	0.00	0.00	0.00	0.00	0.00	0.00	0.00	0.01
27	0.03	0.03	0.03	0.02	0.02	0.01	0.01	0.00	0.01	0.01	0.01
28	0.03	0.02	0.02	0.01	0.00	0.00	0.00	0.00	0.00	0.01	0.03
29	0.00	0.00	0.00	0.00	0.00	0.01	0.01	0.01	0.01	0.01	0.01
30	0.01	0.01	0.00	0.00	0.00	0.00	0.00	0.00	0.00	0.00	0.00

OXIDES OF NITROGEN - NO S050

FREQUENCY DISTRIBUTION TABLES

MONTH APR. 84

PERCENT OF READINGS WITH WIND DIRECTION

WIND DIRECTION	POLLUTANT OCC. HOURS	FREQUENCY OF OCCURRENCE %
N	4	3.4
NE	6	5.2
E	0	0.0
SE	5	4.3
S	3	2.6
SW	5	4.3
W	57	49.1
NW	6	5.2
CALM	0	0.0
INOP	30	25.9

FREQUENCY OF READINGS WITH WIND DIRECTION

WIND DIRECTION	HOURS OF WIND OCCURRENCE	HOURS OF READINGS	FREQUENCY OF READINGS WITH WIND
N	21	4	19.0
NE	110	6	5.5
E	45	0	0.0
SE	39	5	12.8
S	145	3	2.1
SW	41	5	12.2
W	97	57	58.8
NW	92	6	6.5
CALM	35	0	0.0
INOP	88	30	34.1

NOTE.1. READINGS CONSIDERED IN FREQUENCY DISTRIBUTION TABLES ARE THOSE GREATER THAN 0.0500 PPM

2. VALUE OF ****** INDICATES NO DATA AVAILABLE OR INSUFFICIENT DATA

3. WIND DATA UTILIZED FOR CORRELATION PURPOSES WAS MONITORED AT ST ALBERT S050

OXIDES OF NITROGEN - NO2 S050

PPM ONE HOUR AVERAGE

MONTH APR. 84

DAY	0001-0800 AVE.	NO.	0801-1600 AVE.	NO.	1601-2400 AVE.	NO.	FULL DAY AVE.	NO.	DAILY PEAK
1	0.01	8	0.01	8	0.01	8	0.01	24	0.02
2	0.02	8	0.01	8	0.02	8	0.02	24	0.04
3	0.01	8	0.01	3	0.02	8	0.01	19	0.03
4	0.01	8	0.01	8	0.01	8	0.01	24	0.03
5	0.01	8	0.01	8	0.02	8	0.01	24	0.03
6	0.01	8	0.01	8	0.00	8	0.01	24	0.01
7	0.00	8	0.00	8	0.01	8	0.00	24	0.01
8	0.01	8	0.00	8	0.00	8	0.00	24	0.01
9	0.00	8	0.00	8	0.00	8	0.00	24	0.00
10	0.00	8	0.00	8	0.00	8	0.00	24	0.00
11	0.00	8	0.00	8	0.01	8	0.00	24	0.01
12	0.00	8	0.00	7	0.00	8	0.00	23	0.01
13	0.00	8	0.00	8	0.00	8	0.00	24	0.00
14	0.00	8	0.00	8	0.00	8	0.00	24	0.00
15	0.00	8	0.00	8	0.00	8	0.00	24	0.01
16	0.00	8	0.00	8	0.00	8	0.00	24	0.00
17	0.00	8	0.00	8	0.00	8	0.00	24	0.01
18	0.00	8	0.00	8	0.00	8	0.00	24	0.00
19	0.00	8	0.00	8	0.00	8	0.00	24	0.00
20	0.00	8	0.00	8	0.00	8	0.00	24	0.00
21	0.00	8	0.00	8	0.00	8	0.00	24	0.00
22	0.00	8	0.00	8	0.00	8	0.00	24	0.00
23	0.00	8	0.00	8	0.00	8	0.00	24	0.00
24	0.00	8	0.00	8	0.00	8	0.00	24	0.00
25	0.00	8	0.00	7	0.00	8	0.00	23	0.00
26	0.00	8	0.00	8	0.00	8	0.00	24	0.00
27	0.00	8	0.00	8	0.00	8	0.00	24	0.00
28	0.00	8	0.00	8	0.00	8	0.00	24	0.00
29	0.00	8	0.00	8	0.00	8	0.00	24	0.00
30	0.00	8	0.00	8	0.00	8	0.00	24	0.00

SUMMARY OF PEAK READINGS, PEAK AVERAGES, MONTHLY STATS

PEAK HOURLY READING 0.04 ON DAY 2 2101 - 2200 HOURS

WIND READINGS HOUR BEFORE/DURING /AFTER PEAK HOURLY READING

S 7 / SE 7 / S 7

PEAK CALENDAR DAY AVG. 0.02 ON DAY 2

ARITHMETIC MEAN 0.00 NO. RDGS. 713 HRS. (%OPER. 99.03%)

COMPARISON TO CLEAN AIR (MAXIMUM LEVELS) REGULATION

	REGULATIONS	NO.IN EXCESS OF REGULATION	% OF TIME PER MONTH THAT REG. WAS EXCEEDED
1-HOUR	0.21	0	0.0
24-HOUR	0.11	0	0.0

COMPARISON TO 24-HOUR REGULATION WAS ON A CALENDAR DAY BASIS ONLY

FREQUENCY DISTRIBUTION

RANGE	NO.OF RDGS.	PERCENT	CUMULATIVE
0.0 - 0.000	475	66.6	66.6
0.001 - 0.110	238	33.4	100.0
0.111 - 0.210	0	0.0	100.0
0.211 - 0.420	0	0.0	100.0
0.421 OR OVER	0	0.0	100.0

ALL MEANS ARE ARITHMETIC UNLESS OTHERWISE SPECIFIED

OXIDES OF NITROGEN - NO2 S050

PPM ONE HOUR AVERAGE

MONTH APR. 84

DAY	1	2	3	4	5	6	7	8	9	10	11	12
1	0.01	0.01	0.01	0.01	0.01	0.01	0.01	0.01	0.00	0.01	0.01	0.0
2	0.01	0.01	0.01	0.01	0.02	0.02	0.03	0.02	0.00	0.00	0.01	0.0
3	0.01	0.01	0.01	0.01	0.01	0.00	0.00	0.00	0.00	0.01	*****	****
4	0.02	0.01	0.01	0.02	0.01	0.00	0.00	0.00	0.00	0.01	0.01	0.0
5	0.02	0.01	0.01	0.02	0.01	0.01	0.02	0.01	0.01	0.00	0.01	0.0
6	0.01	0.01	0.01	0.01	0.01	0.01	0.01	0.01	0.01	0.01	0.01	0.0
7	0.00	0.00	0.00	0.00	0.00	0.00	0.00	0.00	0.00	0.00	0.00	0.0
8	0.01	0.01	0.01	0.01	0.01	0.00	0.00	0.00	0.00	0.00	0.00	0.0
9	0.00	0.00	0.00	0.00	0.00	0.00	0.00	0.00	0.00	0.00	0.00	0.0
10	0.00	0.00	0.00	0.00	0.00	0.00	0.00	0.00	0.00	0.00	0.00	0.0
11	0.00	0.00	0.00	0.00	0.00	0.00	0.00	0.00	0.00	0.00	0.00	0.0
12	0.00	0.00	0.00	0.00	0.00	0.00	0.00	0.00	0.00	0.01	*****	0.0
13	0.00	0.00	0.00	0.00	0.00	0.00	0.00	0.00	0.00	0.00	0.00	0.0
14	0.00	0.00	0.00	0.00	0.00	0.00	0.00	0.00	0.00	0.00	0.00	0.0
15	0.00	0.00	0.00	0.00	0.00	0.00	0.01	0.01	0.00	0.00	0.00	0.0
16	0.00	0.00	0.00	0.00	0.00	0.00	0.00	0.00	0.00	0.00	0.00	0.0
17	0.00	0.00	0.00	0.00	0.00	0.00	0.00	0.00	0.00	0.00	0.00	0.0
18	0.00	0.00	0.00	0.00	0.00	0.00	0.00	0.00	0.00	0.00	0.00	0.0
19	0.00	0.00	0.00	0.00	0.00	0.00	0.00	0.00	0.00	0.00	0.00	0.0
20	0.00	0.00	0.00	0.00	0.00	0.00	0.00	0.00	0.00	0.00	0.00	0.0
21	0.00	0.00	0.00	0.00	0.00	0.00	0.00	0.00	0.00	0.00	0.00	0.0
22	0.00	0.00	0.00	0.00	0.00	0.00	0.00	0.00	0.00	0.00	0.00	0.0
23	0.00	0.00	0.00	0.00	0.00	0.00	0.00	0.00	0.00	0.00	0.00	0.0
24	0.00	0.00	0.00	0.00	0.00	0.00	0.00	0.00	0.00	0.00	0.00	0.0
25	0.00	0.00	0.00	0.00	0.00	0.00	0.00	0.00	*****	0.00	0.00	0.0
26	0.00	0.00	0.00	0.00	0.00	0.00	0.00	0.00	0.00	0.00	0.00	0.0
27	0.00	0.00	0.00	0.00	0.00	0.00	0.00	0.00	0.00	0.00	0.00	0.0
28	0.00	0.00	0.00	0.00	0.00	0.00	0.00	0.00	0.00	0.00	0.00	0.0
29	0.00	0.00	0.00	0.00	0.00	0.00	0.00	0.00	0.00	0.00	0.00	0.0
30	0.00	0.00	0.00	0.00	0.00	0.00	0.00	0.00	0.00	0.00	0.00	0.0

DAY	13	14	15	16	17	18	19	20	21	22	23	24
1	0.01	0.00	0.01	0.01	0.01	0.02	0.02	0.02	0.01	0.01	0.01	0.0
2	0.01	0.01	0.01	0.01	0.01	0.01	0.02	0.03	0.03	0.04	0.02	0.0
3	*****	*****	*****	0.01	0.02	0.01	0.02	0.02	0.03	0.02	0.01	0.0
4	0.01	0.01	0.01	0.01	0.01	0.00	0.01	0.01	0.01	0.01	0.03	0.0
5	0.01	0.00	0.00	0.01	0.01	0.01	0.01	0.01	0.03	0.02	0.02	0.0
6	0.01	0.01	0.01	0.01	0.00	0.00	0.00	0.00	0.00	0.00	0.00	0.0
7	0.00	0.00	0.00	0.00	0.01	0.01	0.01	0.01	0.01	0.01	0.01	0.0
8	0.00	0.00	0.00	0.00	0.00	0.00	0.00	0.00	0.00	0.00	0.00	0.0
9	0.00	0.00	0.00	0.00	0.00	0.00	0.00	0.00	0.00	0.00	0.00	0.0
10	0.00	0.00	0.00	0.00	0.00	0.00	0.00	0.00	0.00	0.00	0.00	0.0
11	0.00	0.00	0.00	0.01	0.01	0.01	0.01	0.01	0.01	0.01	0.01	0.0
12	0.00	0.00	0.00	0.00	0.00	0.00	0.00	0.00	0.00	0.00	0.00	0.0
13	0.00	0.00	0.00	0.00	0.00	0.00	0.00	0.00	0.00	0.00	0.00	0.0
14	0.00	0.00	0.00	0.00	0.00	0.00	0.00	0.00	0.00	0.00	0.00	0.0
15	0.00	0.00	0.00	0.00	0.00	0.00	0.00	0.00	0.00	0.00	0.00	0.0
16	0.00	0.00	0.00	0.00	0.00	0.00	0.00	0.00	0.00	0.00	0.00	0.0
17	0.00	0.01	0.01	0.00	0.00	0.00	0.00	0.00	0.00	0.00	0.00	0.0
18	0.00	0.00	0.00	0.00	0.00	0.00	0.00	0.00	0.00	0.00	0.00	0.0
19	0.00	0.00	0.00	0.00	0.00	0.00	0.00	0.00	0.00	0.00	0.00	0.0
20	0.00	0.00	0.00	0.00	0.00	0.00	0.00	0.00	0.00	0.00	0.00	0.0
21	0.00	0.00	0.00	0.00	0.00	0.00	0.00	0.00	0.00	0.00	0.00	0.0
22	0.00	0.00	0.00	0.00	0.00	0.00	0.00	0.00	0.00	0.00	0.00	0.0
23	0.00	0.00	0.00	0.00	0.00	0.00	0.00	0.00	0.00	0.00	0.00	0.0
24	0.00	0.00	0.00	0.00	0.00	0.00	0.00	0.00	0.00	0.00	0.00	0.0
25	0.00	0.00	0.00	0.00	0.00	0.00	0.00	0.00	0.00	0.00	0.00	0.0
26	0.00	0.00	0.00	0.00	0.00	0.00	0.00	0.00	0.00	0.00	0.00	0.0
27	0.00	0.00	0.00	0.00	0.00	0.00	0.00	0.00	0.00	0.00	0.00	0.0
28	0.00	0.00	0.00	0.00	0.00	0.00	0.00	0.00	0.00	0.00	0.00	0.0
29	0.00	0.00	0.00	0.00	0.00	0.00	0.00	0.00	0.00	0.00	0.00	0.0
30	0.00	0.00	0.00	0.00	0.00	0.00	0.00	0.00	0.00	0.00	0.00	0.0

OXIDES OF NITROGEN - NO2 S050

FREQUENCY DISTRIBUTION TABLES

MONTH APR. 84

PERCENT OF READINGS WITH WIND DIRECTION

WIND DIRECTION	POLLUTANT OCC. HOURS	FREQUENCY OF OCCURRENCE %
N	0	0.0
NE	9	6.3
E	11	7.7
SE	11	7.7
S	30	21.1
SW	17	12.0
W	9	6.3
NW	9	6.3
CALM	0	0.0
INOP	46	32.4

FREQUENCY OF READINGS WITH WIND DIRECTION

WIND DIRECTION	HOURS OF WIND OCCURRENCE	HOURS OF READINGS	FREQUENCY OF READINGS WITH WIND
N	21	0	0.0
NE	110	9	8.2
E	45	11	24.4
SE	39	11	28.2
S	145	30	20.7
SW	41	17	41.5
W	97	9	9.3
NW	92	9	9.8
CALM	35	0	0.0
INOP	88	46	52.3

NOTE.1. READINGS CONSIDERED IN FREQUENCY DISTRIBUTION TABLES ARE THOSE GREATER THAN 0.0100 PPM

2. VALUE OF ****** INDICATES NO DATA AVAILABLE OR INSUFFICIENT DATA

3. WIND DATA UTILIZED FOR CORRELATION PURPOSES WAS MONITORED AT ST ALBERT S050

SULFUR DIOXIDE SO50

PPM ONE HOUR AVERAGE

MONTH APR. 84

DAY	0001-0800 AVE.	NO.	0801-1600 AVE.	NO.	1601-2400 AVE.	NO.	FULL DAY AVE.	NO.	DAILY PEAK
1	0.00	8	0.00	8	0.00	8	0.00	24	0.00
2	0.00	8	0.00	8	0.00	8	0.00	24	0.00
3	0.00	8	0.00	8	0.00	8	0.00	24	0.00
4	0.00	8	0.00	8	0.00	8	0.00	24	0.00
5	0.00	8	0.00	8	0.00	8	0.00	24	0.00
6	0.00	8	0.00	8	0.00	8	0.00	24	0.00
7	0.00	8	0.00	8	0.00	8	0.00	24	0.00
8	0.00	8	0.00	8	0.00	8	0.00	24	0.00
9	0.00	8	0.00	8	0.00	8	0.00	24	0.00
10	0.00	8	0.00	8	0.00	8	0.00	24	0.00
11	0.00	8	0.00	8	0.00	8	0.00	24	0.00
12	0.00	8	0.00	8	0.00	8	0.00	24	0.00
13	0.00	8	0.00	8	0.00	8	0.00	24	0.00
14	0.00	8	0.00	8	0.00	8	0.00	24	0.00
15	0.00	8	0.00	8	0.00	8	0.00	24	0.00
16	0.00	8	0.00	8	0.00	8	0.00	24	0.00
17	0.00	8	0.00	8	0.00	8	0.00	24	0.00
18	0.00	8	0.00	8	0.00	8	0.00	24	0.00
19	0.00	8	0.00	8	0.00	8	0.00	24	0.00
20	0.00	8	0.00	8	0.00	8	0.00	24	0.00
21	0.00	8	0.00	8	0.00	8	0.00	24	0.00
22	0.00	8	0.00	8	0.00	8	0.00	24	0.00
23	0.00	8	0.00	8	0.00	8	0.00	24	0.00
24	0.00	8	0.00	7	0.00	8	0.00	23	0.00
25	0.00	8	0.00	8	0.00	8	0.00	24	0.00
26	0.00	8	0.00	8	0.00	8	0.00	24	0.00
27	0.00	8	0.00	8	0.00	8	0.00	24	0.00
28	0.00	8	0.00	8	0.00	8	0.00	24	0.00
29	0.00	8	0.00	8	0.00	8	0.00	24	0.00
30	0.00	8	0.00	8	0.00	8	0.00	24	0.00

SUMMARY OF PEAK READINGS, PEAK AVERAGES, MONTHLY STATS

PEAK HOURLY READING 0.00 ON DAY 1 001 - 100 HOURS

WIND READINGS HOUR BEFORE/DURING /AFTER PEAK HOURLY READING

DE 0 / S 9 / S 9

PEAK CALENDAR DAY AVG. 0.00 ON DAY 1

ARITHMETIC MEAN 0.00 NO. RDGS. 719 HRS. (%OPER. 99.86%)

COMPARISON TO CLEAN AIR (MAXIMUM LEVELS) REGULATION

	REGULATIONS	NO.IN EXCESS OF REGULATION	% OF TIME PER MONTH THAT REG. WAS EXCEEDED
1-HOUR	0.17	0	0.0
24-HOUR	0.06	0	0.0

COMPARISON TO 24-HOUR REGULATION WAS ON A CALENDAR DAY BASIS ONLY

FREQUENCY DISTRIBUTION

RANGE	NO.OF RDGS.	PERCENT	CUMULATIVE
0.0 - 0.000	719	100.0	100.0
0.001 - 0.060	0	0.0	100.0
0.061 - 0.170	0	0.0	100.0
0.171 - 0.340	0	0.0	100.0
0.341 OR OVER	0	0.0	100.0

ALL MEANS ARE ARITHMETIC UNLESS OTHERWISE SPECIFIED

SULFUR DIOXIDE SO50

PPM ONE HOUR AVERAGE

MONTH APR. 84

DAY	1	2	3	4	5	6	7	8	9	10	11	1
1	0.00	0.00	0.00	0.00	0.00	0.00	0.00	0.00	0.00	0.00	0.00	0
2	0.00	0.00	0.00	0.00	0.00	0.00	0.00	0.00	0.00	0.00	0.00	0
3	0.00	0.00	0.00	0.00	0.00	0.00	0.00	0.00	0.00	0.00	0.00	0
4	0.00	0.00	0.00	0.00	0.00	0.00	0.00	0.00	0.00	0.00	0.00	0
5	0.00	0.00	0.00	0.00	0.00	0.00	0.00	0.00	0.00	0.00	0.00	0
6	0.00	0.00	0.00	0.00	0.00	0.00	0.00	0.00	0.00	0.00	0.00	0
7	0.00	0.00	0.00	0.00	0.00	0.00	0.00	0.00	0.00	0.00	0.00	0
8	0.00	0.00	0.00	0.00	0.00	0.00	0.00	0.00	0.00	0.00	0.00	0
9	0.00	0.00	0.00	0.00	0.00	0.00	0.00	0.00	0.00	0.00	0.00	0
10	0.00	0.00	0.00	0.00	0.00	0.00	0.00	0.00	0.00	0.00	0.00	0
11	0.00	0.00	0.00	0.00	0.00	0.00	0.00	0.00	0.00	0.00	0.00	0
12	0.00	0.00	0.00	0.00	0.00	0.00	0.00	0.00	0.00	0.00	0.00	0
13	0.00	0.00	0.00	0.00	0.00	0.00	0.00	0.00	0.00	0.00	0.00	0
14	0.00	0.00	0.00	0.00	0.00	0.00	0.00	0.00	0.00	0.00	0.00	0
15	0.00	0.00	0.00	0.00	0.00	0.00	0.00	0.00	0.00	0.00	0.00	0
16	0.00	0.00	0.00	0.00	0.00	0.00	0.00	0.00	0.00	0.00	0.00	0
17	0.00	0.00	0.00	0.00	0.00	0.00	0.00	0.00	0.00	0.00	0.00	0
18	0.00	0.00	0.00	0.00	0.00	0.00	0.00	0.00	0.00	0.00	0.00	0
19	0.00	0.00	0.00	0.00	0.00	0.00	0.00	0.00	0.00	0.00	0.00	0
20	0.00	0.00	0.00	0.00	0.00	0.00	0.00	0.00	0.00	0.00	0.00	0
21	0.00	0.00	0.00	0.00	0.00	0.00	0.00	0.00	0.00	0.00	0.00	0
22	0.00	0.00	0.00	0.00	0.00	0.00	0.00	0.00	0.00	0.00	0.00	0
23	0.00	0.00	0.00	0.00	0.00	0.00	0.00	0.00	0.00	0.00	0.00	0
24	0.00	0.00	0.00	0.00	0.00	0.00	0.00	0.00	0.00	0.00	*****	0
25	0.00	0.00	0.00	0.00	0.00	0.00	0.00	0.00	0.00	0.00	0.00	0
26	0.00	0.00	0.00	0.00	0.00	0.00	0.00	0.00	0.00	0.00	0.00	0
27	0.00	0.00	0.00	0.00	0.00	0.00	0.00	0.00	0.00	0.00	0.00	0
28	0.00	0.00	0.00	0.00	0.00	0.00	0.00	0.00	0.00	0.00	0.00	0
29	0.00	0.00	0.00	0.00	0.00	0.00	0.00	0.00	0.00	0.00	0.00	0
30	0.00	0.00	0.00	0.00	0.00	0.00	0.00	0.00	0.00	0.00	0.00	0

DAY	13	14	15	16	17	18	19	20	21	22	23	2
1	0.00	0.00	0.00	0.00	0.00	0.00	0.00	0.00	0.00	0.00	0.00	0
2	0.00	0.00	0.00	0.00	0.00	0.00	0.00	0.00	0.00	0.00	0.00	0
3	0.00	0.00	0.00	0.00	0.00	0.00	0.00	0.00	0.00	0.00	0.00	0
4	0.00	0.00	0.00	0.00	0.00	0.00	0.00	0.00	0.00	0.00	0.00	0
5	0.00	0.00	0.00	0.00	0.00	0.00	0.00	0.00	0.00	0.00	0.00	0
6	0.00	0.00	0.00	0.00	0.00	0.00	0.00	0.00	0.00	0.00	0.00	0
7	0.00	0.00	0.00	0.00	0.00	0.00	0.00	0.00	0.00	0.00	0.00	0
8	0.00	0.00	0.00	0.00	0.00	0.00	0.00	0.00	0.00	0.00	0.00	0
9	0.00	0.00	0.00	0.00	0.00	0.00	0.00	0.00	0.00	0.00	0.00	0
10	0.00	0.00	0.00	0.00	0.00	0.00	0.00	0.00	0.00	0.00	0.00	0
11	0.00	0.00	0.00	0.00	0.00	0.00	0.00	0.00	0.00	0.00	0.00	0
12	0.00	0.00	0.00	0.00	0.00	0.00	0.00	0.00	0.00	0.00	0.00	0
13	0.00	0.00	0.00	0.00	0.00	0.00	0.00	0.00	0.00	0.00	0.00	0
14	0.00	0.00	0.00	0.00	0.00	0.00	0.00	0.00	0.00	0.00	0.00	0
15	0.00	0.00	0.00	0.00	0.00	0.00	0.00	0.00	0.00	0.00	0.00	0
16	0.00	0.00	0.00	0.00	0.00	0.00	0.00	0.00	0.00	0.00	0.00	0
17	0.00	0.00	0.00	0.00	0.00	0.00	0.00	0.00	0.00	0.00	0.00	0
18	0.00	0.00	0.00	0.00	0.00	0.00	0.00	0.00	0.00	0.00	0.00	0
19	0.00	0.00	0.00	0.00	0.00	0.00	0.00	0.00	0.00	0.00	0.00	0
20	0.00	0.00	0.00	0.00	0.00	0.00	0.00	0.00	0.00	0.00	0.00	0
21	0.00	0.00	0.00	0.00	0.00	0.00	0.00	0.00	0.00	0.00	0.00	0
22	0.00	0.00	0.00	0.00	0.00	0.00	0.00	0.00	0.00	0.00	0.00	0
23	0.00	0.00	0.00	0.00	0.00	0.00	0.00	0.00	0.00	0.00	0.00	0
24	0.00	0.00	0.00	0.00	0.00	0.00	0.00	0.00	0.00	0.00	0.00	0
25	0.00	0.00	0.00	0.00	0.00	0.00	0.00	0.00	0.00	0.00	0.00	0
26	0.00	0.00	0.00	0.00	0.00	0.00	0.00	0.00	0.00	0.00	0.00	0
27	0.00	0.00	0.00	0.00	0.00	0.00	0.00	0.00	0.00	0.00	0.00	0
28	0.00	0.00	0.00	0.00	0.00	0.00	0.00	0.00	0.00	0.00	0.00	0
29	0.00	0.00	0.00	0.00	0.00	0.00	0.00	0.00	0.00	0.00	0.00	0
30	0.00	0.00	0.00	0.00	0.00	0.00	0.00	0.00	0.00	0.00	0.00	0

SULFUR DIOXIDE S050

FREQUENCY DISTRIBUTION TABLES

MONTH APR. 84

PERCENT OF READINGS WITH WIND DIRECTION

WIND DIRECTION	POLLUTANT OCC. HOURS	FREQUENCY OF OCCURRENCE %
N	0	0.0
NE	0	0.0
E	0	0.0
SE	0	0.0
S	0	0.0
SW	0	0.0
W	0	0.0
NW	0	0.0
CALM	0	0.0
INOP	0	0.0

FREQUENCY OF READINGS WITH WIND DIRECTION

WIND DIRECTION	HOURS OF WIND OCCURRENCE	HOURS OF READINGS	FREQUENCY OF READINGS WITH WIND
N	21	0	0.0
NE	111	0	0.0
E	45	0	0.0
SE	39	0	0.0
S	149	0	0.0
SW	41	0	0.0
W	97	0	0.0
NW	91	0	0.0
CALM	35	0	0.0
INOP	90	0	0.0

NOTE.1. READINGS CONSIDERED IN FREQUENCY DISTRIBUTION TABLES ARE THOSE GREATER THAN 0.0001 PPM

2. VALUE OF ****** INDICATES NO DATA AVAILABLE OR INSUFFICIENT DATA

3. WIND DATA UTILIZED FOR CORRELATION PURPOSES WAS MONITORED AT ST ALBERT S050

HYDROGEN SULFIDE (H2S) S050

PPB ONE HOUR AVERAGE

MONTH APR. 84

DAY	0001-0800 AVE.	NO.	0801-1600 AVE.	NO.	1601-2400 AVE.	NO.	FULL DAY AVE.	NO.	DAILY PEAK
1	0.00	8	0.00	8	0.00	8	0.00	24	0.0
2	0.00	8	0.00	8	0.00	8	0.00	24	0.0
3	0.00	8	0.00	8	0.00	8	0.00	24	0.0
4	0.00	8	0.00	8	0.00	8	0.00	24	0.0
5	0.00	8	0.00	8	0.00	8	0.00	24	0.0
6	0.00	8	0.00	8	0.00	8	0.00	24	0.0
7	0.00	8	0.00	8	0.00	8	0.00	24	0.0
8	1.75	8	0.13	8	0.00	8	0.63	24	3.0
9	0.13	8	0.00	8	0.00	8	0.04	24	1.0
10	0.00	8	0.00	8	0.00	8	0.00	24	0.0
11	0.00	8	0.00	8	0.00	8	0.00	24	0.0
12	0.00	8	0.00	8	0.00	8	0.00	24	0.0
13	0.00	8	0.00	8	0.00	8	0.00	24	0.0
14	0.00	8	0.00	8	0.00	8	0.00	24	0.0
15	0.00	8	0.00	8	0.00	8	0.00	24	0.0
16	0.00	8	0.00	8	0.00	8	0.00	24	0.0
17	0.00	8	0.00	8	0.00	8	0.00	24	0.0
18	0.00	8	0.00	8	0.00	8	0.00	24	0.0
19	0.00	8	0.00	8	0.00	8	0.00	24	0.0
20	0.00	8	0.00	8	0.00	8	0.00	24	0.0
21	0.00	8	0.00	8	0.00	8	0.00	24	0.0
22	0.00	8	0.00	8	0.00	8	0.00	24	0.0
23	0.00	8	0.00	8	0.00	8	0.00	24	0.0
24	0.00	8	0.00	7	0.00	8	0.00	23	0.0
25	0.00	8	0.00	8	0.00	8	0.00	24	0.0
26	0.00	8	0.00	8	0.00	8	0.00	24	0.0
27	0.00	8	0.00	8	0.00	8	0.00	24	0.0
28	0.00	8	0.00	8	0.00	8	0.00	24	0.0
29	0.00	8	0.00	8	0.00	8	0.00	24	0.0
30	0.00	8	0.00	8	0.00	8	0.00	24	0.0

SUMMARY OF PEAK READINGS, PEAK AVERAGES, MONTHLY STATS

PEAK HOURLY READING 3.0 ON DAY 8 101 - 200 HOURS

WIND READINGS HOUR BEFORE/DURING /AFTER PEAK HOURLY READING

W 5 / W 5 / W 5

PEAK CALENDAR DAY AVG. 0.63 ON DAY 8

ARITHMETIC MEAN 0.02 NO. RDGS. 719 HRS. (%OPER. 99.86%)

COMPARISON TO CLEAN AIR (MAXIMUM LEVELS) REGULATION

	REGULATIONS	NO.IN EXCESS OF REGULATION	% OF TIME PER MONTH THAT REG. WAS EXCEEDED
1-HOUR	10.00	0	0.0
24-HOUR	3.00	0	0.0

COMPARISON TO 24-HOUR REGULATION WAS ON A CALENDAR DAY BASIS ONLY

FREQUENCY DISTRIBUTION

RANGE	NO.OF RDGS.	PERCENT	CUMULATIVE
0.0 - 0.000	710	98.7	98.7
0.001 - 1.500	4	0.6	99.3
1.501 - 3.999	5	0.7	100.0
4.000 - 7.999	0	0.0	100.0
8.000 OR OVER	0	0.0	100.0

ALL MEANS ARE ARITHMETIC UNLESS OTHERWISE SPECIFIED

HYDROGEN SULFIDE (H2S) S050

PPB ONE HOUR AVERAGE

MONTH APR. 84

DAY	1	2	3	4	5	6	7	8	9	10	11	12
1	0.0	0.0	0.0	0.0	0.0	0.0	0.0	0.0	0.0	0.0	0.0	0.0
2	0.0	0.0	0.0	0.0	0.0	0.0	0.0	0.0	0.0	0.0	0.0	0.0
3	0.0	0.0	0.0	0.0	0.0	0.0	0.0	0.0	0.0	0.0	0.0	0.0
4	0.0	0.0	0.0	0.0	0.0	0.0	0.0	0.0	0.0	0.0	0.0	0.0
5	0.0	0.0	0.0	0.0	0.0	0.0	0.0	0.0	0.0	0.0	0.0	0.0
6	0.0	0.0	0.0	0.0	0.0	0.0	0.0	0.0	0.0	0.0	0.0	0.0
7	0.0	0.0	0.0	0.0	0.0	0.0	0.0	0.0	0.0	0.0	0.0	0.0
8	0.0	3.0	2.0	3.0	2.0	1.0	1.0	2.0	1.0	0.0	0.0	0.0
9	0.0	0.0	0.0	0.0	0.0	0.0	1.0	0.0	0.0	0.0	0.0	0.0
10	0.0	0.0	0.0	0.0	0.0	0.0	0.0	0.0	0.0	0.0	0.0	0.0
11	0.0	0.0	0.0	0.0	0.0	0.0	0.0	0.0	0.0	0.0	0.0	0.0
12	0.0	0.0	0.0	0.0	0.0	0.0	0.0	0.0	0.0	0.0	0.0	0.0
13	0.0	0.0	0.0	0.0	0.0	0.0	0.0	0.0	0.0	0.0	0.0	0.0
14	0.0	0.0	0.0	0.0	0.0	0.0	0.0	0.0	0.0	0.0	0.0	0.0
15	0.0	0.0	0.0	0.0	0.0	0.0	0.0	0.0	0.0	0.0	0.0	0.0
16	0.0	0.0	0.0	0.0	0.0	0.0	0.0	0.0	0.0	0.0	0.0	0.0
17	0.0	0.0	0.0	0.0	0.0	0.0	0.0	0.0	0.0	0.0	0.0	0.0
18	0.0	0.0	0.0	0.0	0.0	0.0	0.0	0.0	0.0	0.0	0.0	0.0
19	0.0	0.0	0.0	0.0	0.0	0.0	0.0	0.0	0.0	0.0	0.0	0.0
20	0.0	0.0	0.0	0.0	0.0	0.0	0.0	0.0	0.0	0.0	0.0	0.0
21	0.0	0.0	0.0	0.0	0.0	0.0	0.0	0.0	0.0	0.0	0.0	0.0
22	0.0	0.0	0.0	0.0	0.0	0.0	0.0	0.0	0.0	0.0	0.0	0.0
23	0.0	0.0	0.0	0.0	0.0	0.0	0.0	0.0	0.0	0.0	0.0	0.0
24	0.0	0.0	0.0	0.0	0.0	0.0	0.0	0.0	0.0	0.0	*****	0.0
25	0.0	0.0	0.0	0.0	0.0	0.0	0.0	0.0	0.0	0.0	0.0	0.0
26	0.0	0.0	0.0	0.0	0.0	0.0	0.0	0.0	0.0	0.0	0.0	0.0
27	0.0	0.0	0.0	0.0	0.0	0.0	0.0	0.0	0.0	0.0	0.0	0.0
28	0.0	0.0	0.0	0.0	0.0	0.0	0.0	0.0	0.0	0.0	0.0	0.0
29	0.0	0.0	0.0	0.0	0.0	0.0	0.0	0.0	0.0	0.0	0.0	0.0
30	0.0	0.0	0.0	0.0	0.0	0.0	0.0	0.0	0.0	0.0	0.0	0.0

DAY	13	14	15	16	17	18	19	20	21	22	23	24
1	0.0	0.0	0.0	0.0	0.0	0.0	0.0	0.0	0.0	0.0	0.0	0.0
2	0.0	0.0	0.0	0.0	0.0	0.0	0.0	0.0	0.0	0.0	0.0	0.0
3	0.0	0.0	0.0	0.0	0.0	0.0	0.0	0.0	0.0	0.0	0.0	0.0
4	0.0	0.0	0.0	0.0	0.0	0.0	0.0	0.0	0.0	0.0	0.0	0.0
5	0.0	0.0	0.0	0.0	0.0	0.0	0.0	0.0	0.0	0.0	0.0	0.0
6	0.0	0.0	0.0	0.0	0.0	0.0	0.0	0.0	0.0	0.0	0.0	0.0
7	0.0	0.0	0.0	0.0	0.0	0.0	0.0	0.0	0.0	0.0	0.0	0.0
8	0.0	0.0	0.0	0.0	0.0	0.0	0.0	0.0	0.0	0.0	0.0	0.0
9	0.0	0.0	0.0	0.0	0.0	0.0	0.0	0.0	0.0	0.0	0.0	0.0
10	0.0	0.0	0.0	0.0	0.0	0.0	0.0	0.0	0.0	0.0	0.0	0.0
11	0.0	0.0	0.0	0.0	0.0	0.0	0.0	0.0	0.0	0.0	0.0	0.0
12	0.0	0.0	0.0	0.0	0.0	0.0	0.0	0.0	0.0	0.0	0.0	0.0
13	0.0	0.0	0.0	0.0	0.0	0.0	0.0	0.0	0.0	0.0	0.0	0.0
14	0.0	0.0	0.0	0.0	0.0	0.0	0.0	0.0	0.0	0.0	0.0	0.0
15	0.0	0.0	0.0	0.0	0.0	0.0	0.0	0.0	0.0	0.0	0.0	0.0
16	0.0	0.0	0.0	0.0	0.0	0.0	0.0	0.0	0.0	0.0	0.0	0.0
17	0.0	0.0	0.0	0.0	0.0	0.0	0.0	0.0	0.0	0.0	0.0	0.0
18	0.0	0.0	0.0	0.0	0.0	0.0	0.0	0.0	0.0	0.0	0.0	0.0
19	0.0	0.0	0.0	0.0	0.0	0.0	0.0	0.0	0.0	0.0	0.0	0.0
20	0.0	0.0	0.0	0.0	0.0	0.0	0.0	0.0	0.0	0.0	0.0	0.0
21	0.0	0.0	0.0	0.0	0.0	0.0	0.0	0.0	0.0	0.0	0.0	0.0
22	0.0	0.0	0.0	0.0	0.0	0.0	0.0	0.0	0.0	0.0	0.0	0.0
23	0.0	0.0	0.0	0.0	0.0	0.0	0.0	0.0	0.0	0.0	0.0	0.0
24	0.0	0.0	0.0	0.0	0.0	0.0	0.0	0.0	0.0	0.0	0.0	0.0
25	0.0	0.0	0.0	0.0	0.0	0.0	0.0	0.0	0.0	0.0	0.0	0.0
26	0.0	0.0	0.0	0.0	0.0	0.0	0.0	0.0	0.0	0.0	0.0	0.0
27	0.0	0.0	0.0	0.0	0.0	0.0	0.0	0.0	0.0	0.0	0.0	0.0
28	0.0	0.0	0.0	0.0	0.0	0.0	0.0	0.0	0.0	0.0	0.0	0.0
29	0.0	0.0	0.0	0.0	0.0	0.0	0.0	0.0	0.0	0.0	0.0	0.0
30	0.0	0.0	0.0	0.0	0.0	0.0	0.0	0.0	0.0	0.0	0.0	0.0

HYDROGEN SULFIDE (H2S) S050

FREQUENCY DISTRIBUTION TABLES

MONTH APR. 84

PERCENT OF READINGS WITH WIND DIRECTION

WIND DIRECTION	POLLUTANT OCC. HOURS	FREQUENCY OF OCCURRENCE %
N	0	0.0
NE	0	0.0
E	0	0.0
SE	0	0.0
S	0	0.0
SW	0	0.0
W	9	100.0
NW	0	0.0
CALM	0	0.0
INOP	0	0.0

FREQUENCY OF READINGS WITH WIND DIRECTION

WIND DIRECTION	HOURS OF WIND OCCURRENCE	HOURS OF READINGS	FREQUENCY OF READINGS WITH WIND
N	21	0	0.0
NE	111	0	0.0
E	45	0	0.0
SE	39	0	0.0
S	149	0	0.0
SW	41	0	0.0
W	97	9	9.3
NW	91	0	0.0
CALM	35	0	0.0
INOP	90	0	0.0

NOTE.1. READINGS CONSIDERED IN FREQUENCY DISTRIBUTION TABLES ARE THOSE GREATER THAN 0.0001 PPB

2. VALUE OF ****** INDICATES NO DATA AVAILABLE OR INSUFFICIENT DATA

3. WIND DATA UTILIZED FOR CORRELATION PURPOSES WAS MONITORED AT ST ALBERT S050

ALBERTA ENVIRONMENT
DIVISION OF POLLUTION CONTROL
AIR QUALITY CONTROL BRANCH

WIND FREQUENCY TABLE

STATION: ST ALBERT S050

MONTH: MAY 1984

INSTRUMENT TYPE: ATHABASCA RES.

DIRECTION	DEGREES	TOTAL HOURS	PERCENT	AVERAGE SPEED IN KM/H
N	338 TO 22	101	13.58	9.5
NE	23 TO 67	76	10.22	9.0
E	68 TO 112	65	8.74	8.4
SE	113 TO 157	106	14.25	12.6
S	158 TO 202	62	8.33	8.9
SW	203 TO 247	32	4.30	8.3
W	248 TO 292	122	16.40	12.5
NW	293 TO 337	81	10.89	14.9
CALM	0 TO 000	0	0.0	

AVERAGE WIND SPEED 11.0 KM/H

WIND INSTRUMENT OPERATIONAL 645 HOURS (86.69%)

AMBIENT AIR MONITORING REPORT FOR THE MONTH OF MAY 1984

STATION: ST ALBER S050

POLLUTANT	MONITOR	RANGE MAX.	PEAK HOURLY	PEAK DAILY	MONTH MEAN	% OPER
NOX		PPM	0.10	0.07	0.03	81.0
NO		PPM	0.10	0.07	0.02	81.6
NO2		PPM	0.05	0.02	0.01	81.0
SO2		PPM	0.01	0.00	0.00	94.9
H2S		PPB	1.0	0.08	0.00	80.1

@ NOTE CARBON MONOXIDE CONTAINS PEAK 8-HR AVERAGE INSTEAD OF PEAK DAILY AVERAGE

S050 MAY 84

COMPARISON TO CLEAN AIR (MAXIMUM LEVELS) REGULATION

POLLUTANT	REGULATIONS		NO.IN EXCESS OF REGULATION	% OF TIME PER MONTH THAT REG. WAS EXCEEDED
NO2	1-HOUR	0.21 PPM	0	0.0
	24-HOUR	0.11 PPM	0	0.0
SO2	1-HOUR	0.17 PPM	0	0.0
	24-HOUR	0.06 PPM	0	0.0
H2S	1-HOUR	10.00 PPB	0	0.0
	24-HOUR	3.00 PPB	0	0.0

NOTE. COMPARISON TO 8-HOUR REGULATION WAS WITH TIME PERIODS 0001 - 080
0801 - 1600 AND 1601 - 2400

NOTE. COMPARISON TO 24-HOUR REGULATION WAS ON A CALENDAR DAY BASIS ONL

NOTE. OTHER POLLUTANTS NOT SPECIFIED IN THE CLEAN AIR (MAXIMUM LEVELS)
REGULATIONS

S050 MAY 84

WIND DIRECTION AND WIND SPEED (KM/H)

DAY	1	2	3	4	5	6	7	8	9	10	11	12	13	14	15	16	17	18	19	20	21	22	23	2
1	SE	SE	SE	SE	SE	SE	SE	SE	SE	SE	SE	SE	SE	SE	SE	SE	SE	SE	SE	SE	SE	SE	SE	S
	10	10	10	10	10	10	10	10	10	14	18	21	21	21	18	18	18	18	14	14	18	18	18	1
2	SE	SE	SE	SE	SE	SE	SE	SE	SE	SE	SE	SE	SE	S	S	SE	SE	SE	SE	SE	SE	SE	SE	S
	21	21	21	21	18	18	18	18	18	18	21	21	21	21	18	18	18	21	18	18	14	10	14	1
3	SE	SE	SE	SE	E	E	E	E	E	SE	SE	E	NE	NE	NE	W	W	W	W	NW	NW	NW	NW	N
	7	7	7	10	7	10	10	10	10	10	14	10	14	14	10	14	21	21	10	14	14	14	14	1
4	NW	NW	W	W	W	W	W	W	W	W	W	W	W	W	W	W	SE	SE	SE	SW	W	W	W	
	14	14	10	10	10	10	10	14	10	10	10	10	10	10	10	14	14	10	7	7	7	5	5	
5	W	W	W	W	W	W	W	NW	N	N	N	NE	NE	NE	NE	NE	NE	NE	NE	NE	E	E	E	S
	7	7	7	7	7	7	7	7	10	10	14	14	14	14	14	14	18	18	21	14	7	7	7	
6	SE	SE	NE	NE	NE	W	N	N	N	N	N	N	N	N	N	N	N	N	NE	NE	NE	NE	NE	N
	1	1	1	1	1	3	7	7	10	10	10	10	10	10	14	14	14	10	10	7	7	5	5	
7	NE	N	NE	NE	NE	W	N	NE	NE	NE	N	N	W	W	NW	NW	NW	NW	N	E	SE	SE	SW	S
	5	5	5	5	5	5	7	7	7	7	10	10	10	10	10	10	7	7	3	3	3	3	3	
8	S	S	S	S	S	S	S	S	S	S	S	SE	SE	SE	SE	S	E	E	E	E	E	SW	SW	N
	5	5	5	5	5	5	7	7	7	10	10	10	10	10	7	9	10	10	10	10	10	7	7	
9	N	NW	NW	N	N	N	N	N	NW	W	W	SW	N	NW	NW	N	N	N	N	W	W	W	W	
	7	7	7	7	7	7	7	7	10	10	10	10	10	7	10	10	10	10	10	7	7	7	7	
10	W	W	W	W	W	W	W	NW	NW	NW	NW	NW	NW	NW	NW	NW	NW	NW	NW	NW	NW	NW	W	
	7	7	7	7	7	7	10	10	10	14	18	18	18	18	18	18	14	14	14	10	9	9	9	
11	NW	NW	W	W	W	W	W	W	W	W	W	SW	S	S	W	W	NW	NW	N	NE	NE	NE	NE	N
	7	7	7	7	7	7	7	7	7	7	10	10	10	10	7	7	7	7	7	7	7	7	7	
12	NE	NE	NE	NE	NE	NE	N	N	N	NE	NE	NE	NE	N	N	N	NE	E	E	E	SE	S	SE	
	7	7	7	10	10	7	7	9	10	14	10	10	7	7	7	7	14	9	7	7	5	5	3	
13	S	S	S	S	S	S	S	W	W	W	SW	SE	SE	S	S	S	S	SE	SE	SE	SE	SE	SE	S
	3	3	3	5	5	5	7	7	9	9	10	10	14	14	18	18	18	18	18	18	18	14	10	1
14	SE	SE	SE	SE	SE	SE	SE	SE	SE	S	S	S	E	SE	N	NE	NE	NE	NE	NE	N	N	N	
	18	14	14	18	10	7	7	9	9	9	9	9	9	7	7	10	14	14	14	10	10	14	14	1
15	N	N	N	N	N	N	N	N	N	NW	N	N	N	N	N	N	N	N	N	N	N	N	N	
	14	10	10	10	10	10	14	10	10	10	10	10	10	10	7	7	7	7	7	7	7	7	7	
16	N	N	N	N	N	N	N	N	N	N	N	N	N	NW	W	W	W	W	W	W	W	W	W	
	7	7	7	7	9	10	9	9	9	9	9	9	9	9	9	18	18	18	18	18	18	18	18	1
17	W	W	W	W	W	W	W	W	W	W	W	W	W	W	W	W	W	W	W	W	W	W	W	
	18	21	21	25	25	25	28	28	28	28	28	28	28	28	28	25	25	25	21	21	18	18	18	1
18	W	W	W	W	W	W	W	W	NW	NW	NW	NW	NW	NW	N	N	NW	W	W	N	SE	SE	SE	S
	18	18	14	14	14	14	14	18	18	18	18	18	14	14	14	10	10	10	10	10	10	10	10	1
19	S	S	S	**	**	**	**	**	**	**	**	**	**	**	**	**	**	**	**	**	**	**	**	-
	9	9	9	**	**	**	**	**	**	**	**	**	**	**	**	**	**	**	**	**	**	**	**	-
20	**	**	**	**	**	**	**	**	**	**	**	**	**	**	**	**	**	**	**	**	**	**	**	-
	**	**	**	**	**	**	**	**	**	**	**	**	**	**	**	**	**	**	**	**	**	**	**	-
21	**	**	**	**	**	**	**	**	**	**	**	**	**	**	**	**	**	**	**	**	**	**	**	-
	**	**	**	**	**	**	**	**	**	**	**	**	**	**	**	**	**	**	**	**	**	**	**	-
22	**	**	**	**	**	**	**	**	**	**	**	**	**	N	NE	E	E	E	E	E	E	E	E	
	**	**	**	**	**	**	**	**	**	**	**	**	**	9	9	18	10	10	10	10	10	10	10	1
23	E	E	E	E	E	E	E	E	SE	SE	S	N	NE	NE	E	E	E	NE	NE	NE	NE	NE	NE	
	10	10	10	10	10	9	9	9	9	9	7	7	10	10	14	14	14	14	14	14	10	9	9	
24	NE	NE	NE	NW	NW	NW	NW	N	SW	SW	SW	SW	W	NE	NE	W	NE	E	E	E	E	E	E	
	7	7	7	7	3	3	3	3	3	7	7	7	7	7	10	7	10	10	10	7	7	5	5	
25	E	E	E	N	W	W	SW	W	W	W	W	SW	SW	S	S	S	S	S	S	S	S	SE	SE	S
	1	7	7	3	5	3	3	3	5	5	7	9	10	10	14	10	10	10	10	9	9	9	3	
26	E	E	SE	SE	E	E	NE	E	S	S	S	S	E	S	W	S	SE	SE	S	W	W	NE	NE	
	3	7	7	7	7	7	7	7	9	10	10	10	10	18	10	14	18	10	9	9	5	3	3	
27	NE	NE	NE	NE	NW	NW	NW	W	SW	SW	W	W	NW	N	N	SW	W	S	S	S	S	S	S	
	3	3	7	7	7	3	7	7	7	7	9	9	14	7	7	10	7	9	7	7	7	7	7	
28	S	S	SW	SW	SW	SW	SW	SW	SW	SW	SW	SW	SW	SW	SW	SW	**	**	**	**	**	**	**	*
	7	5	5	7	7	7	7	7	9	10	10	14	14	14	14	14	**	**	**	**	**	**	**	*
29	**	**	**	**	**	**	**	**	**	N	N	N	N	N	NW	NW	NW	NW	E	NE	E	E	E	
	**	**	**	**	**	**	**	**	**	14	10	10	10	10	10	10	9	9	7	7	5	5	7	
30	E	E	E	NE	E	E	SE	SE	SE	SE	S	S	SE	SE	N	NE	SE	SE	N	N	N	N	N	
	7	5	5	7	7	7	9	9	10	10	10	9	9	9	18	14	9	9	10	18	18	18	14	1
31	NW	NW	NW	NW	NW	NW	NW	NW	NW	NW	NW	NW	NW	NW	NW	NW	NW	NW	NW	NW	NW	NW	NW	N
	10	14	18	21	21	21	18	21	25	28	28	28	25	28	28	28	28	28	28	25	25	25	25	2

OXIDES OF NITROGEN - NOX S050

PPM ONE HOUR AVERAGE

MONTH MAY 84

DAY	0001-0800 AVE.	NO.	0801-1600 AVE.	NO.	1601-2400 AVE.	NO.	FULL DAY AVE.	NO.	DAILY PEAK
1	0.01	8	0.01	8	0.01	8	0.01	24	0.02
2	0.01	8	0.01	8	0.01	8	0.01	24	0.02
3	0.02	8	0.02	8	0.01	8	0.02	24	0.03
4	0.02	8	0.03	8	0.02	8	0.02	24	0.04
5	0.01	4	0.0	0	0.0	0	0.01	4	0.01
6	0.0	0	0.0	0	0.0	0	0.0	0	0.0
7	0.0	0	0.0	0	0.0	0	0.0	0	0.0
8	0.0	0	0.02	2	0.01	8	0.01	10	0.02
9	0.01	8	0.02	8	0.02	8	0.02	24	0.05
10	0.02	8	0.02	8	0.01	8	0.02	24	0.03
11	0.04	8	0.04	8	0.06	8	0.05	24	0.08
12	0.04	8	0.04	8	0.05	8	0.04	24	0.10
13	0.06	8	0.04	8	0.03	8	0.04	24	0.09
14	0.03	8	0.04	8	0.03	6	0.04	22	0.06
15	0.04	4	0.0	0	0.0	0	0.04	4	0.05
16	0.0	0	0.0	0	0.0	0	0.0	0	0.0
17	0.0	0	0.02	6	0.02	8	0.02	14	0.02
18	0.03	8	0.02	8	0.03	8	0.03	24	0.04
19	0.03	8	0.02	8	0.02	8	0.02	24	0.03
20	0.03	8	0.02	8	0.02	8	0.02	24	0.05
21	0.02	8	0.02	8	0.02	8	0.02	24	0.02
22	0.02	8	0.01	8	0.03	8	0.02	24	0.04
23	0.05	8	0.10	8	0.07	8	0.07	24	0.10
24	0.06	8	0.07	8	0.06	8	0.06	24	0.08
25	0.05	8	0.04	8	0.04	8	0.04	24	0.07
26	0.05	8	0.03	8	0.03	8	0.04	24	0.06
27	0.02	8	0.02	8	0.05	8	0.03	24	0.08
28	0.03	8	0.03	8	0.04	8	0.04	24	0.05
29	0.03	8	0.02	8	0.04	8	0.03	24	0.05
30	0.03	8	0.05	5	0.02	8	0.03	21	0.06
31	0.03	8	0.02	8	0.02	8	0.02	24	0.03

SUMMARY OF PEAK READINGS, PEAK AVERAGES, MONTHLY STATS

PEAK HOURLY READING 0.10 ON DAY 12 2301 - 2400 HOURS

WIND READINGS HOUR BEFORE/DURING /AFTER PEAK HOURLY READING

SE 3 / S 3 / S 3

PEAK CALENDAR DAY AVG. 0.07 ON DAY 23

ARITHMETIC MEAN 0.03 NO. RDGS. 603 HRS. (%OPER. 81.05%)

POLLUTANT NOT SPECIFIED IN THE CLEAN AIR (MAXIMUM LEVELS) REGULATIONS

FREQUENCY DISTRIBUTION

RANGE	NO.OF RDGS.	PERCENT	CUMULATIVE
0.0 - 0.000	11	1.8	1.8
0.001 - 0.110	592	98.2	100.0
0.111 - 0.210	0	0.0	100.0
0.211 - 0.420	0	0.0	100.0
0.421 OR OVER	0	0.0	100.0

ALL MEANS ARE ARITHMETIC UNLESS OTHERWISE SPECIFIED

OXIDES OF NITROGEN - NOX S050

PPM ONE HOUR AVERAGE

MONTH MAY 84

DAY	1	2	3	4	5	6	7	8	9	10	11	12
1	0.02	0.02	0.02	0.02	0.01	0.01	0.01	0.01	0.01	0.01	0.01	0.00
2	0.01	0.00	0.01	0.02	0.01	0.00	0.01	0.02	0.01	0.02	0.01	0.01
3	0.01	0.02	0.03	0.03	0.03	0.01	0.02	0.02	0.02	0.02	0.02	0.02
4	0.02	0.02	0.01	0.02	0.02	0.02	0.02	0.02	0.03	0.04	0.04	0.04
5	0.01	0.01	0.01	0.01	*****	*****	*****	*****	*****	*****	*****	*****
6	*****	*****	*****	*****	*****	*****	*****	*****	*****	*****	*****	*****
7	*****	*****	*****	*****	*****	*****	*****	*****	*****	*****	*****	*****
8	*****	*****	*****	*****	*****	*****	*****	*****	*****	*****	*****	*****
9	0.01	0.02	0.01	0.01	0.01	0.01	0.02	0.03	0.05	0.02	0.01	0.01
10	0.03	0.02	0.02	0.02	0.02	0.03	0.03	0.03	0.02	0.02	0.03	0.02
11	0.03	0.03	0.03	0.03	0.04	0.04	0.04	0.05	0.05	0.05	0.05	0.05
12	0.05	0.05	0.05	0.05	0.04	0.03	0.03	0.03	0.03	0.04	0.04	0.03
13	0.09	0.09	0.06	0.05	0.04	0.04	0.04	0.04	0.05	0.04	0.04	0.04
14	0.03	0.03	0.02	0.02	0.02	0.03	0.06	0.06	0.04	0.04	0.04	0.04
15	*****	*****	0.03	0.04	0.04	0.05	*****	*****	*****	*****	*****	*****
16	*****	*****	*****	*****	*****	*****	*****	*****	*****	*****	*****	*****
17	*****	*****	*****	*****	*****	*****	*****	*****	*****	*****	0.02	0.02
18	0.02	0.03	0.03	0.03	0.03	0.02	0.03	0.03	0.03	0.02	0.02	0.03
19	0.03	0.03	0.03	0.02	0.02	0.02	0.03	0.03	0.03	0.03	0.03	0.03
20	0.03	0.04	0.05	0.03	0.03	0.03	0.03	0.02	0.02	0.02	0.02	0.02
21	0.02	0.02	0.02	0.02	0.02	0.02	0.01	0.01	0.01	0.02	0.02	0.02
22	0.02	0.02	0.02	0.03	0.01	0.03	0.02	0.01	0.01	0.01	0.01	0.01
23	0.04	0.04	0.04	0.05	0.05	0.05	0.06	0.08	0.10	0.10	0.10	0.11
24	0.06	0.06	0.06	0.06	0.06	0.06	0.06	0.06	0.06	0.07	0.06	0.03
25	0.07	0.05	0.03	0.04	0.04	0.04	0.07	0.06	0.07	0.05	0.03	0.05
26	0.06	0.06	0.06	0.05	0.04	0.04	0.04	0.05	0.04	0.04	0.03	0.03
27	0.03	0.04	0.02	0.01	0.01	0.01	0.02	0.01	0.01	0.02	0.02	0.01
28	0.02	0.03	0.03	0.03	0.04	0.05	0.04	0.04	0.04	0.04	0.04	0.03
29	0.03	0.03	0.03	0.02	0.03	0.03	0.02	0.02	0.03	0.03	0.02	0.03
30	0.04	0.03	0.03	0.03	0.02	0.03	0.03	0.03	0.04	0.06	0.04	****
31	0.01	0.02	0.03	0.03	0.03	0.03	0.03	0.03	0.02	0.02	0.02	0.02

DAY	13	14	15	16	17	18	19	20	21	22	23	24
1	0.00	0.01	0.01	0.01	0.00	0.00	0.01	0.01	0.01	0.01	0.01	0.01
2	0.01	0.01	0.01	0.01	0.01	0.00	0.00	0.00	0.00	0.00	0.01	0.02
3	0.02	0.03	0.03	0.01	0.01	0.03	0.01	0.01	0.01	0.01	0.01	0.01
4	0.03	0.02	0.02	0.02	0.02	0.02	0.02	0.02	0.02	0.01	0.02	0.02
5	*****	*****	*****	*****	*****	*****	*****	*****	*****	*****	*****	****
6	*****	*****	*****	*****	*****	*****	*****	*****	*****	*****	*****	****
7	*****	*****	*****	*****	*****	*****	*****	*****	*****	*****	*****	****
8	*****	*****	0.02	0.01	0.01	0.01	0.01	0.02	0.01	0.01	0.01	0.01
9	0.02	0.02	0.03	0.03	0.02	0.02	0.02	0.02	0.02	0.02	0.03	0.03
10	0.02	0.02	0.02	0.02	0.02	0.01	0.01	0.01	0.01	0.01	0.01	0.01
11	0.04	0.04	0.04	0.04	0.04	0.04	0.04	0.04	0.08	0.07	0.08	0.07
12	0.03	0.04	0.04	0.04	0.04	0.02	0.03	0.03	0.04	0.06	0.09	0.10
13	0.04	0.02	0.03	0.03	0.03	0.03	0.03	0.03	0.03	0.03	0.04	0.04
14	0.03	0.04	0.05	0.04	*****	0.04	0.04	0.03	0.03	0.02	0.04	****
15	*****	*****	*****	*****	*****	*****	*****	*****	*****	*****	*****	****
16	*****	*****	*****	*****	*****	*****	*****	*****	*****	*****	*****	****
17	0.02	0.02	0.02	0.02	0.02	0.02	0.02	0.02	0.02	0.02	0.02	0.02
18	0.02	0.02	0.03	0.02	0.02	0.01	0.02	0.04	0.03	0.04	0.03	0.03
19	0.03	0.02	0.01	0.02	0.01	0.01	0.01	0.02	0.02	0.02	0.02	0.01
20	0.01	0.01	0.01	0.02	0.02	0.02	0.02	0.02	0.02	0.02	0.02	0.01
21	0.02	0.02	0.02	0.02	0.02	0.02	0.02	0.02	0.02	0.02	0.02	0.02
22	0.01	0.01	0.01	0.01	0.01	0.01	0.02	0.03	0.03	0.04	0.04	0.04
23	0.10	0.10	0.09	0.09	0.08	0.07	0.07	0.07	0.06	0.06	0.06	0.05
24	0.08	0.07	0.08	0.06	0.06	0.06	0.07	0.06	0.05	0.05	0.08	0.03
25	0.03	0.03	0.03	0.03	0.03	0.03	0.03	0.03	0.03	0.04	0.06	0.07
26	0.03	0.02	0.02	0.02	0.03	0.03	0.03	0.02	0.02	0.03	0.03	0.03
27	0.03	0.03	0.03	0.03	0.03	0.04	0.05	0.05	0.07	0.08	0.05	0.04
28	0.03	0.03	0.03	0.03	0.03	0.03	0.03	0.05	0.05	0.04	0.04	0.04
29	0.03	0.02	0.02	0.02	0.03	0.03	0.03	0.03	0.05	0.05	0.05	0.04
30	*****	*****	0.06	0.04	0.04	0.04	0.03	0.03	0.02	0.02	0.01	0.01
31	0.02	0.02	0.02	0.02	0.02	0.02	0.02	0.02	0.02	0.02	0.02	0.02

OXIDES OF NITROGEN - NOX S050

FREQUENCY DISTRIBUTION TABLES

MONTH MAY 84

PERCENT OF READINGS WITH WIND DIRECTION

WIND DIRECTION	POLLUTANT OCC. HOURS	FREQUENCY OF OCCURRENCE %
N	41	8.3
NE	47	9.5
E	53	10.7
SE	57	11.5
S	47	9.5
SW	26	5.3
W	81	16.4
NW	61	12.3
CALM	0	0.0
INOP	82	16.6

FREQUENCY OF READINGS WITH WIND DIRECTION

WIND DIRECTION	HOURS OF WIND OCCURRENCE	HOURS OF READINGS	FREQUENCY OF READINGS WITH WIND
N	48	41	85.4
NE	50	47	94.0
E	61	53	86.9
SE	96	57	59.4
S	50	47	94.0
SW	30	26	86.7
W	95	81	85.3
NW	74	61	82.4
CALM	0	0	0.0
INOP	99	82	82.8

NOTE.1. READINGS CONSIDERED IN FREQUENCY DISTRIBUTION TABLES ARE THOSE GREATER THAN 0.0100 PPM

2. VALUE OF ****** INDICATES NO DATA AVAILABLE OR INSUFFICIENT DATA

3. WIND DATA UTILIZED FOR CORRELATION PURPOSES WAS MONITORED AT ST ALBERT S050

OXIDES OF NITROGEN - NO S050

PPM ONE HOUR AVERAGE

MONTH MAY 84

DAY	0001-0800 AVE.	NO.	0801-1600 AVE.	NO.	1601-2400 AVE.	NO.	FULL DAY AVE.	NO.	DAILY PEAK
1	0.01	8	0.01	8	0.01	8	0.01	24	0.02
2	0.01	8	0.01	8	0.01	8	0.01	24	0.02
3	0.02	8	0.02	8	0.01	8	0.02	24	0.03
4	0.02	8	0.03	8	0.02	8	0.02	24	0.04
5	0.01	4	0.0	0	0.0	0	0.01	4	0.01
6	0.0	0	0.0	0	0.0	0	0.0	0	0.0
7	0.0	0	0.0	0	0.0	0	0.0	0	0.0
8	0.0	0	0.02	2	0.01	8	0.01	10	0.02
9	0.01	8	0.02	8	0.02	8	0.02	24	0.05
10	0.02	8	0.02	8	0.01	8	0.02	24	0.03
11	0.03	8	0.03	8	0.04	8	0.03	24	0.06
12	0.03	8	0.02	8	0.03	8	0.03	24	0.05
13	0.03	8	0.02	8	0.02	8	0.03	24	0.05
14	0.02	8	0.03	8	0.03	8	0.03	24	0.04
15	0.03	6	0.0	0	0.0	0	0.03	6	0.05
16	0.0	0	0.0	0	0.0	0	0.0	0	0.0
17	0.0	0	0.02	6	0.02	8	0.02	14	0.02
18	0.02	8	0.02	8	0.02	8	0.02	24	0.03
19	0.02	8	0.01	8	0.01	8	0.01	24	0.02
20	0.02	8	0.01	8	0.02	8	0.02	24	0.03
21	0.02	8	0.01	8	0.02	8	0.02	24	0.02
22	0.02	8	0.01	8	0.03	8	0.02	24	0.04
23	0.05	8	0.10	8	0.07	8	0.07	24	0.10
24	0.06	8	0.07	8	0.05	8	0.06	24	0.08
25	0.04	8	0.02	8	0.02	8	0.03	24	0.07
26	0.03	8	0.01	8	0.01	8	0.02	24	0.03
27	0.01	8	0.02	8	0.02	8	0.02	24	0.04
28	0.03	8	0.03	8	0.02	8	0.02	24	0.04
29	0.01	8	0.02	8	0.02	8	0.02	24	0.02
30	0.02	8	0.03	5	0.02	8	0.02	21	0.04
31	0.02	8	0.02	8	0.02	8	0.02	24	0.03

SUMMARY OF PEAK READINGS, PEAK AVERAGES, MONTHLY STATS

PEAK HOURLY READING 0.10 ON DAY 23 901 - 1000 HOURS

WIND READINGS HOUR BEFORE/DURING /AFTER PEAK HOURLY READING

SE 9 / SE 9 / S 7

PEAK CALENDAR DAY AVG. 0.07 ON DAY 23

ARITHMETIC MEAN 0.02 NO. RDGS. 607 HRS. (%OPER. 81.59%)

POLLUTANT NOT SPECIFIED IN THE CLEAN AIR (MAXIMUM LEVELS) REGULATIONS

FREQUENCY DISTRIBUTION

RANGE	NO.OF RDGS.	PERCENT	CUMULATIVE
0.0 - 0.000	11	1.8	1.8
0.001 - 0.110	596	98.2	100.0
0.111 - 0.210	0	0.0	100.0
0.211 - 0.420	0	0.0	100.0
0.421 OR OVER	0	0.0	100.0

ALL MEANS ARE ARITHMETIC UNLESS OTHERWISE SPECIFIED

OXIDES OF NITROGEN - NO S050

PPM ONE HOUR AVERAGE

MONTH MAY 84

DAY	1	2	3	4	5	6	7	8	9	10	11	1
1	0.02	0.02	0.02	0.02	0.01	0.01	0.01	0.01	0.01	0.01	0.01	0.
2	0.01	0.00	0.01	0.02	0.01	0.00	0.01	0.01	0.01	0.02	0.01	0.
3	0.01	0.02	0.03	0.03	0.03	0.01	0.02	0.02	0.02	0.02	0.02	0.
4	0.02	0.02	0.01	0.02	0.02	0.02	0.02	0.02	0.03	0.04	0.04	0.
5	0.01	0.01	0.01	0.01	*****	*****	*****	*****	*****	*****	*****	***
6	*****	*****	*****	*****	*****	*****	*****	*****	*****	*****	*****	***
7	*****	*****	*****	*****	*****	*****	*****	*****	*****	*****	*****	***
8	*****	*****	*****	*****	*****	*****	*****	*****	*****	*****	*****	***
9	0.01	0.02	0.01	0.01	0.01	0.01	0.02	0.03	0.05	0.02	0.01	0.
10	0.03	0.02	0.02	0.02	0.02	0.03	0.03	0.03	0.02	0.02	0.03	0.
11	0.03	0.02	0.03	0.03	0.03	0.03	0.03	0.04	0.03	0.03	0.03	0.
12	0.03	0.03	0.03	0.03	0.03	0.02	0.02	0.02	0.02	0.02	0.02	0.
13	0.05	0.05	0.03	0.02	0.03	0.03	0.03	0.03	0.03	0.03	0.02	0.
14	0.02	0.02	0.02	0.01	0.01	0.02	0.03	0.04	0.03	0.03	0.03	0.
15	0.01	0.02	0.03	0.04	0.04	0.05	*****	*****	*****	*****	*****	***
16	*****	*****	*****	*****	*****	*****	*****	*****	*****	*****	*****	***
17	*****	*****	*****	*****	*****	*****	*****	*****	*****	*****	0.02	0.
18	0.02	0.03	0.03	0.03	0.02	0.02	0.02	0.02	0.02	0.01	0.02	0.
19	0.02	0.02	0.02	0.02	0.02	0.02	0.02	0.02	0.02	0.02	0.01	0.
20	0.02	0.03	0.03	0.03	0.02	0.02	0.02	0.02	0.02	0.02	0.01	0.
21	0.01	0.02	0.02	0.02	0.02	0.02	0.01	0.01	0.01	0.01	0.02	0.
22	0.02	0.02	0.02	0.02	0.01	0.03	0.02	0.01	0.01	0.01	0.01	0.
23	0.04	0.03	0.04	0.05	0.05	0.05	0.06	0.07	0.09	0.10	0.10	0.
24	0.06	0.06	0.06	0.06	0.06	0.06	0.06	0.05	0.06	0.07	0.06	0.
25	0.07	0.03	0.03	0.03	0.03	0.03	0.06	0.04	0.05	0.03	0.02	0.
26	0.03	0.03	0.03	0.03	0.02	0.02	0.02	0.03	0.02	0.02	0.01	0.
27	0.01	0.01	0.01	0.01	0.01	0.01	0.01	0.01	0.01	0.01	0.01	0.
28	0.01	0.02	0.02	0.03	0.03	0.04	0.03	0.03	0.03	0.03	0.03	0.
29	0.02	0.02	0.02	0.01	0.01	0.02	0.01	0.01	0.02	0.02	0.02	0.
30	0.02	0.02	0.02	0.02	0.02	0.02	0.02	0.01	0.02	0.03	0.02	***
31	0.01	0.01	0.02	0.03	0.03	0.03	0.02	0.03	0.02	0.02	0.02	0.

DAY	13	14	15	16	17	18	19	20	21	22	23	2
1	0.00	0.01	0.01	0.01	0.00	0.00	0.01	0.01	0.01	0.01	0.01	0.
2	0.01	0.01	0.01	0.01	0.01	0.00	0.00	0.00	0.00	0.00	0.01	0.
3	0.02	0.03	0.03	0.01	0.01	0.03	0.01	0.01	0.01	0.01	0.01	0.
4	0.03	0.02	0.02	0.02	0.02	0.02	0.02	0.02	0.02	0.01	0.02	0.
5	*****	*****	*****	*****	*****	*****	*****	*****	*****	*****	*****	***
6	*****	*****	*****	*****	*****	*****	*****	*****	*****	*****	*****	***
7	*****	*****	*****	*****	*****	*****	*****	*****	*****	*****	*****	***
8	*****	*****	0.02	0.01	0.01	0.01	0.01	0.02	0.01	0.01	0.01	0.
9	0.02	0.02	0.03	0.03	0.02	0.02	0.02	0.02	0.02	0.02	0.03	0.
10	0.02	0.02	0.02	0.02	0.02	0.01	0.01	0.01	0.01	0.01	0.01	0.
11	0.03	0.03	0.04	0.03	0.03	0.03	0.03	0.03	0.06	0.04	0.06	0.
12	0.02	0.03	0.03	0.03	0.03	0.01	0.02	0.01	0.02	0.03	0.05	0.
13	0.02	0.01	0.02	0.02	0.02	0.02	0.02	0.02	0.02	0.02	0.03	0.
14	0.03	0.03	0.03	0.03	0.03	0.03	0.03	0.02	0.02	0.01	0.04	0.
15	*****	*****	*****	*****	*****	*****	*****	*****	*****	*****	*****	***
16	*****	*****	*****	*****	*****	*****	*****	*****	*****	*****	*****	***
17	0.02	0.02	0.02	0.02	0.02	0.02	0.02	0.02	0.02	0.02	0.02	0.
18	0.02	0.01	0.02	0.02	0.01	0.01	0.02	0.02	0.02	0.02	0.02	0.
19	0.01	0.01	0.01	0.01	0.01	0.01	0.01	0.01	0.01	0.01	0.01	0.
20	0.01	0.01	0.01	0.01	0.02	0.02	0.02	0.02	0.02	0.02	0.02	0.
21	0.01	0.01	0.01	0.02	0.02	0.02	0.02	0.02	0.02	0.02	0.02	0.
22	0.01	0.01	0.01	0.01	0.01	0.01	0.02	0.03	0.03	0.04	0.04	0.
23	0.10	0.10	0.09	0.09	0.08	0.07	0.07	0.07	0.06	0.06	0.06	0.
24	0.08	0.07	0.07	0.05	0.05	0.06	0.06	0.05	0.03	0.03	0.05	0.
25	0.02	0.02	0.02	0.02	0.02	0.02	0.01	0.01	0.01	0.01	0.03	0.
26	0.01	0.01	0.01	0.01	0.01	0.01	0.01	0.01	0.01	0.01	0.01	0.
27	0.03	0.02	0.02	0.02	0.02	0.03	0.02	0.01	0.03	0.04	0.02	0.
28	0.03	0.02	0.02	0.02	0.02	0.02	0.02	0.02	0.02	0.01	0.02	0.
29	0.02	0.02	0.02	0.02	0.02	0.02	0.02	0.02	0.02	0.02	0.02	0.
30	*****	*****	0.04	0.02	0.02	0.02	0.02	0.02	0.02	0.02	0.01	0.
31	0.02	0.02	0.02	0.02	0.02	0.02	0.02	0.02	0.02	0.02	0.02	0.

OXIDES OF NITROGEN - NO S050

FREQUENCY DISTRIBUTION TABLES

MONTH MAY 84

PERCENT OF READINGS WITH WIND DIRECTION

WIND DIRECTION	POLLUTANT OCC. HOURS	FREQUENCY OF OCCURRENCE %
N	41	9.4
NE	43	9.9
E	50	11.5
SE	50	11.5
S	36	8.3
SW	25	5.7
W	77	17.7
NW	56	12.8
CALM	0	0.0
INOP	58	13.3

FREQUENCY OF READINGS WITH WIND DIRECTION

WIND DIRECTION	HOURS OF WIND OCCURRENCE	HOURS OF READINGS	FREQUENCY OF READINGS WITH WIND
N	51	41	80.4
NE	51	43	84.3
E	61	50	82.0
SE	96	50	52.1
S	50	36	72.0
SW	30	25	83.3
W	95	77	81.1
NW	74	56	75.7
CALM	0	0	0.0
INOP	99	58	58.6

NOTE.1. READINGS CONSIDERED IN FREQUENCY DISTRIBUTION TABLES ARE THOSE GREATER THAN 0.0100 PPM

2. VALUE OF ****** INDICATES NO DATA AVAILABLE OR INSUFFICIENT DATA

3. WIND DATA UTILIZED FOR CORRELATION PURPOSES WAS MONITORED AT ST ALBERT S050

OXIDES OF NITROGEN - NO2 S050

PPM ONE HOUR AVERAGE

MONTH MAY 84

DAY	0001-0800 AVE.	NO.	0801-1600 AVE.	NO.	1601-2400 AVE.	NO.	FULL DAY AVE.	NO.	DAILY PEAK
1	0.00	8	0.00	8	0.00	8	0.00	24	0.00
2	0.00	8	0.00	8	0.00	8	0.00	24	0.01
3	0.00	8	0.00	8	0.00	8	0.00	24	0.00
4	0.00	8	0.00	8	0.00	8	0.00	24	0.00
5	0.00	4	0.0	0	0.0	0	0.00	4	0.00
6	0.0	0	0.0	0	0.0	0	0.0	0	0.0
7	0.0	0	0.0	0	0.0	0	0.0	0	0.0
8	0.0	0	0.00	2	0.00	8	0.00	10	0.00
9	0.00	8	0.00	8	0.00	8	0.00	24	0.00
10	0.00	8	0.00	8	0.00	8	0.00	24	0.00
11	0.01	8	0.01	8	0.02	8	0.01	24	0.03
12	0.02	8	0.01	8	0.02	8	0.02	24	0.05
13	0.02	8	0.01	8	0.01	8	0.02	24	0.04
14	0.01	8	0.01	8	0.01	6	0.01	22	0.03
15	0.00	4	0.0	0	0.0	0	0.00	4	0.00
16	0.0	0	0.0	0	0.0	0	0.0	0	0.0
17	0.0	0	0.00	6	0.00	8	0.00	14	0.00
18	0.00	8	0.01	8	0.01	8	0.01	24	0.02
19	0.01	8	0.01	8	0.01	8	0.01	24	0.02
20	0.01	8	0.00	8	0.00	8	0.00	24	0.02
21	0.00	8	0.01	8	0.00	8	0.00	24	0.01
22	0.00	8	0.00	8	0.00	8	0.00	24	0.01
23	0.00	8	0.00	8	0.00	8	0.00	24	0.01
24	0.00	8	0.00	8	0.01	8	0.01	24	0.03
25	0.01	8	0.01	8	0.02	8	0.01	24	0.03
26	0.02	8	0.02	8	0.02	8	0.02	24	0.03
27	0.01	8	0.01	8	0.03	8	0.01	24	0.04
28	0.01	8	0.01	8	0.02	8	0.01	24	0.03
29	0.01	8	0.01	8	0.02	8	0.01	24	0.03
30	0.01	8	0.02	5	0.01	8	0.01	21	0.03
31	0.00	8	0.00	8	0.00	8	0.00	24	0.01

SUMMARY OF PEAK READINGS, PEAK AVERAGES, MONTHLY STATS

PEAK HOURLY READING 0.05 ON DAY 12 2301 - 2400 HOURS

WIND READINGS HOUR BEFORE/DURING /AFTER PEAK HOURLY READING

SE 3 / S 3 / S 3

PEAK CALENDAR DAY AVG. 0.02 ON DAY 26

ARITHMETIC MEAN 0.01 NO. RDGS. 603 HRS. (%OPER. 81.05%)

COMPARISON TO CLEAN AIR (MAXIMUM LEVELS) REGULATION

	REGULATIONS	NO.IN EXCESS OF REGULATION	% OF TIME PER MONTH THAT REG. WAS EXCEEDED
1-HOUR	0.21	0	0.0
24-HOUR	0.11	0	0.0

COMPARISON TO 24-HOUR REGULATION WAS ON A CALENDAR DAY BASIS ONLY

FREQUENCY DISTRIBUTION

RANGE	NO.OF RDGS.	PERCENT	CUMULATIVE
0.0 - 0.000	297	49.3	49.3
0.001 - 0.110	306	50.7	100.0
0.111 - 0.210	0	0.0	100.0
0.211 - 0.420	0	0.0	100.0
0.421 OR OVER	0	0.0	100.0

ALL MEANS ARE ARITHMETIC UNLESS OTHERWISE SPECIFIED

OXIDES OF NITROGEN - NO2 S050

PPM ONE HOUR AVERAGE

MONTH MAY 84

DAY	1	2	3	4	5	6	7	8	9	10	11	12
1	0.00	0.00	0.00	0.00	0.00	0.00	0.00	0.00	0.00	0.00	0.00	0.0
2	0.00	0.00	0.00	0.00	0.00	0.00	0.00	0.01	0.00	0.00	0.00	0.0
3	0.00	0.00	0.00	0.00	0.00	0.00	0.00	0.00	0.00	0.00	0.00	0.0
4	0.00	0.00	0.00	0.00	0.00	0.00	0.00	0.00	0.00	0.00	0.00	0.0
5	0.00	0.00	0.00	0.00	*****	*****	*****	*****	*****	*****	*****	****
6	*****	*****	*****	*****	*****	*****	*****	*****	*****	*****	*****	****
7	*****	*****	*****	*****	*****	*****	*****	*****	*****	*****	*****	****
8	*****	*****	*****	*****	*****	*****	*****	*****	*****	*****	*****	****
9	0.00	0.00	0.00	0.00	0.00	0.00	0.00	0.00	0.00	0.00	0.00	0.0
10	0.00	0.00	0.00	0.00	0.00	0.00	0.00	0.00	0.00	0.00	0.00	0.0
11	0.00	0.01	0.00	0.00	0.01	0.01	0.01	0.01	0.02	0.02	0.02	0.0
12	0.02	0.02	0.02	0.02	0.01	0.01	0.01	0.01	0.01	0.02	0.02	0.0
13	0.04	0.04	0.03	0.03	0.01	0.01	0.01	0.01	0.02	0.01	0.02	0.0
14	0.01	0.01	0.00	0.01	0.01	0.01	0.03	0.02	0.01	0.01	0.01	0.0
15	*****	*****	0.00	0.00	0.00	0.00	*****	*****	*****	*****	*****	****
16	*****	*****	*****	*****	*****	*****	*****	*****	*****	*****	*****	****
17	*****	*****	*****	*****	*****	*****	*****	*****	*****	*****	0.00	0.0
18	0.00	0.00	0.00	0.00	0.01	0.00	0.01	0.01	0.01	0.01	0.00	0.0
19	0.01	0.01	0.01	0.00	0.00	0.00	0.01	0.01	0.01	0.01	0.02	0.0
20	0.01	0.01	0.02	0.00	0.01	0.01	0.01	0.00	0.00	0.00	0.01	0.0
21	0.01	0.00	0.00	0.00	0.00	0.00	0.00	0.00	0.00	0.01	0.00	0.0
22	0.00	0.00	0.00	0.01	0.00	0.00	0.00	0.00	0.00	0.00	0.00	0.0
23	0.00	0.01	0.00	0.00	0.00	0.00	0.00	0.01	0.01	0.00	0.00	0.0
24	0.00	0.00	0.00	0.00	0.00	0.00	0.00	0.01	0.00	0.00	0.00	0.0
25	0.00	0.02	0.00	0.01	0.01	0.01	0.01	0.02	0.02	0.02	0.01	0.0
26	0.03	0.03	0.03	0.02	0.02	0.02	0.02	0.02	0.02	0.02	0.02	0.0
27	0.02	0.03	0.01	0.00	0.00	0.00	0.01	0.00	0.00	0.01	0.01	0.0
28	0.01	0.01	0.01	0.00	0.01	0.01	0.01	0.01	0.01	0.01	0.01	0.0
29	0.01	0.01	0.01	0.01	0.02	0.01	0.01	0.01	0.01	0.01	0.00	0.0
30	0.02	0.01	0.01	0.01	0.00	0.01	0.01	0.02	0.02	0.03	0.02	****
31	0.00	0.01	0.01	0.00	0.00	0.00	0.01	0.00	0.00	0.00	0.00	0.0

DAY	13	14	15	16	17		19	20	21	22	23	24
1	0.00	0.00	0.00	0.00	0.00	0	0.00	0.00	0.00	0.00	0.00	0.0
2	0.00	0.00	0.00	0.00	0.00	0	0.00	0.00	0.00	0.00	0.00	0.0
3	0.00	0.00	0.00	0.00	0.00	0	0.00	0.00	0.00	0.00	0.00	0.0
4	0.00	0.00	0.00	0.00	0.00	0	0.00	0.00	0.00	0.00	0.00	0.0
5	*****	*****	*****	*****	*****	*****	*****	*****	*****	*****	*****	****
6	*****	*****	*****	*****	*****	*****	*****	*****	*****	*****	*****	****
7	*****	*****	*****	*****	*****	*****	*****	*****	*****	*****	*****	****
8	*****	*****	0.00	0.00	0.00	0.00	0.00	0.00	0.00	0.00	0.00	0.0
9	0.00	0.00	0.00	0.00	0.00	0.00	0.00	0.00	0.00	0.00	0.00	0.0
10	0.00	0.00	0.00	0.00	0.00	0.00	0.00	0.00	0.00	0.00	0.00	0.0
11	0.01	0.01	0.00	0.01	0.01	0.01	0.01	0.01	0.02	0.03	0.02	0.0
12	0.01	0.01	0.01	0.01	0.01	0.01	0.01	0.02	0.02	0.03	0.04	0.0
13	0.02	0.01	0.01	0.01	0.01	0.01	0.01	0.01	0.01	0.01	0.01	0.0
14	0.00	0.01	0.02	0.01	*****	0.01	0.01	0.01	0.01	0.01	0.00	****
15	*****	*****	*****	*****	*****	*****	*****	*****	*****	*****	*****	****
16	*****	*****	*****	*****	*****	*****	*****	*****	*****	*****	*****	****
17	0.00	0.00	0.00	0.00	0.00	0.00	0.00	0.00	0.00	0.00	0.00	0.0
18	0.00	0.01	0.01	0.00	0.01	0.00	0.00	0.02	0.01	0.02	0.01	0.0
19	0.02	0.01	0.00	0.01	0.00	0.00	0.00	0.01	0.01	0.01	0.01	0.0
20	0.00	0.00	0.00	0.01	0.00	0.00	0.00	0.00	0.00	0.00	0.00	0.0
21	0.01	0.01	0.01	0.00	0.00	0.00	0.00	0.00	0.00	0.00	0.00	0.0
22	0.00	0.00	0.00	0.00	0.00	0.00	0.00	0.00	0.00	0.00	0.00	0.0
23	0.00	0.00	0.00	0.00	0.00	0.00	0.00	0.00	0.00	0.00	0.00	0.0
24	0.00	0.00	0.01	0.01	0.01	0.00	0.01	0.01	0.02	0.02	0.03	0.0
25	0.01	0.01	0.01	0.01	0.01	0.01	0.02	0.02	0.02	0.03	0.03	0.0
26	0.02	0.01	0.01	0.01	0.02	0.02	0.02	0.01	0.01	0.02	0.02	0.0
27	0.00	0.01	0.01	0.01	0.01	0.01	0.03	0.04	0.04	0.04	0.03	0.0
28	0.00	0.01	0.01	0.01	0.01	0.01	0.01	0.03	0.03	0.03	0.02	0.0
29	0.01	0.00	0.00	0.00	0.01	0.01	0.01	0.01	0.03	0.03	0.03	0.0
30	*****	*****	0.02	0.02	0.02	0.02	0.01	0.01	0.00	0.00	0.00	0.0
31	0.00	0.00	0.00	0.00	0.00	0.00	0.00	0.00	0.00	0.00	0.00	0.0

OXIDES OF NITROGEN - NO2 S050

FREQUENCY DISTRIBUTION TABLES

MONTH MAY 84

PERCENT OF READINGS WITH WIND DIRECTION

WIND DIRECTION	POLLUTANT OCC. HOURS	FREQUENCY OF OCCURRENCE %
N	23	8.5
NE	31	11.4
E	27	10.0
SE	39	14.4
S	46	17.0
SW	19	7.0
W	26	9.6
NW	13	4.8
CALM	0	0.0
INOP	47	17.3

FREQUENCY OF READINGS WITH WIND DIRECTION

WIND DIRECTION	HOURS OF WIND OCCURRENCE	HOURS OF READINGS	FREQUENCY OF READINGS WITH WIND
N	48	23	47.9
NE	50	31	62.0
E	61	27	44.3
SE	96	39	40.6
S	50	46	92.0
SW	30	19	63.3
W	95	26	27.4
NW	74	13	17.6
CALM	0	0	0.0
INOP	99	47	47.5

NOTE.1. READINGS CONSIDERED IN FREQUENCY DISTRIBUTION TABLES ARE THOSE GREATER THAN 0.0100 PPM

2. VALUE OF ****** INDICATES NO DATA AVAILABLE OR INSUFFICIENT DATA

3. WIND DATA UTILIZED FOR CORRELATION PURPOSES WAS MONITORED AT ST. ALBERT S050

SULFUR DIOXIDE S050

PPM ONE HOUR AVERAGE

MONTH MAY 84

DAY	0001-0800 AVE.	NO.	0801-1600 AVE.	NO.	1601-2400 AVE.	NO.	FULL DAY AVE.	NO.	DAILY PEAK
1	0.00	8	0.00	8	0.00	8	0.00	24	0.00
2	0.00	8	0.00	8	0.00	8	0.00	24	0.00
3	0.00	8	0.00	8	0.0	0	0.00	16	0.00
4	0.0	0	0.00	6	0.0	0	0.00	6	0.00
5	0.00	3	0.00	8	0.00	8	0.00	19	0.00
6	0.00	8	0.00	8	0.00	8	0.00	24	0.01
7	0.00	8	0.00	8	0.00	8	0.00	24	0.00
8	0.00	6	0.00	6	0.00	8	0.00	20	0.00
9	0.00	8	0.00	8	0.00	8	0.00	24	0.00
10	0.00	8	0.00	8	0.00	8	0.00	24	0.00
11	0.00	8	0.00	8	0.00	8	0.00	24	0.00
12	0.00	8	0.00	8	0.00	8	0.00	24	0.00
13	0.00	8	0.00	8	0.00	8	0.00	24	0.00
14	0.00	8	0.00	8	0.00	8	0.00	24	0.00
15	0.00	8	0.00	8	0.00	8	0.00	24	0.00
16	0.00	8	0.00	8	0.00	8	0.00	24	0.00
17	0.00	8	0.00	8	0.00	8	0.00	24	0.00
18	0.00	8	0.00	8	0.00	8	0.00	24	0.00
19	0.00	8	0.00	8	0.00	8	0.00	24	0.00
20	0.00	8	0.00	8	0.00	8	0.00	24	0.00
21	0.00	8	0.00	8	0.00	8	0.00	24	0.00
22	0.00	8	0.00	8	0.00	8	0.00	24	0.00
23	0.00	8	0.00	8	0.00	8	0.00	24	0.00
24	0.00	8	0.00	8	0.00	8	0.00	24	0.00
25	0.00	8	0.00	8	0.00	8	0.00	24	0.00
26	0.00	8	0.00	8	0.00	8	0.00	24	0.00
27	0.00	8	0.00	8	0.00	8	0.00	24	0.01
28	0.00	8	0.00	8	0.00	8	0.00	24	0.01
29	0.00	8	0.00	8	0.00	8	0.00	24	0.00
30	0.00	8	0.00	5	0.00	8	0.00	21	0.00
31	0.00	8	0.00	8	0.00	8	0.00	24	0.00

SUMMARY OF PEAK READINGS, PEAK AVERAGES, MONTHLY STATS

PEAK HOURLY READING 0.01 ON DAY 6 501 - 600 HOURS

WIND READINGS HOUR BEFORE/DURING /AFTER PEAK HOURLY READING

NE 1 / W 3 / N 7

PEAK CALENDAR DAY AVG. 0.00 ON DAY 27

ARITHMETIC MEAN 0.00 NO. RDGS. 706 HRS. (%OPER. 94.89%)

COMPARISON TO CLEAN AIR (MAXIMUM LEVELS) REGULATION

	REGULATIONS	NO.IN EXCESS OF REGULATION	% OF TIME PER MONTH THAT REG. WAS EXCEEDED
1-HOUR	0.17	0	0.0
24-HOUR	0.06	0	0.0

COMPARISON TO 24-HOUR REGULATION WAS ON A CALENDAR DAY BASIS ONLY

FREQUENCY DISTRIBUTION

RANGE	NO.OF RDGS.	PERCENT	CUMULATIVE
0.0 - 0.000	702	99.4	99.4
0.001 - 0.060	4	0.6	100.0
0.061 - 0.170	0	0.0	100.0
0.171 - 0.340	0	0.0	100.0
0.341 OR OVER	0	0.0	100.0

ALL MEANS ARE ARITHMETIC UNLESS OTHERWISE SPECIFIED

SULFUR DIOXIDE S050

PPM ONE HOUR AVERAGE

MONTH MAY 84

DAY	1	2	3	4	5	6	7	8	9	10	11	
1	0.00	0.00	0.00	0.00	0.00	0.00	0.00	0.00	0.00	0.00	0.00	0
2	0.00	0.00	0.00	0.00	0.00	0.00	0.00	0.00	0.00	0.00	0.00	0
3	0.00	0.00	0.00	0.00	0.00	0.00	0.00	0.00	0.00	0.00	0.00	0
4	*****	*****	*****	*****	*****	*****	*****	*****	0.00	0.00	0.00	0
5	*****	*****	*****	*****	*****	0.00	0.00	0.00	0.00	0.00	0.00	0
6	0.00	0.00	0.00	0.00	0.00	0.01	0.00	0.00	0.00	0.00	0.00	0
7	0.00	0.00	0.00	0.00	0.00	0.00	0.00	0.00	0.00	0.00	0.00	0
8	0.00	0.00	0.00	0.00	0.00	0.00	*****	*****	*****	*****	0.00	0
9	0.00	0.00	0.00	0.00	0.00	0.00	0.00	0.00	0.00	0.00	0.00	0
10	0.00	0.00	0.00	0.00	0.00	0.00	0.00	0.00	0.00	0.00	0.00	0
11	0.00	0.00	0.00	0.00	0.00	0.00	0.00	0.00	0.00	0.00	0.00	0
12	0.00	0.00	0.00	0.00	0.00	0.00	0.00	0.00	0.00	0.00	0.00	0
13	0.00	0.00	0.00	0.00	0.00	0.00	0.00	0.00	0.00	0.00	0.00	0
14	0.00	0.00	0.00	0.00	0.00	0.00	0.00	0.00	0.00	0.00	0.00	0
15	0.00	0.00	0.00	0.00	0.00	0.00	0.00	0.00	0.00	0.00	0.00	0
16	0.00	0.00	0.00	0.00	0.00	0.00	0.00	0.00	0.00	0.00	0.00	0
17	0.00	0.00	0.00	0.00	0.00	0.00	0.00	0.00	0.00	0.00	0.00	0
18	0.00	0.00	0.00	0.00	0.00	0.00	0.00	0.00	0.00	0.00	0.00	0
19	0.00	0.00	0.00	0.00	0.00	0.00	0.00	0.00	0.00	0.00	0.00	0
20	0.00	0.00	0.00	0.00	0.00	0.00	0.00	0.00	0.00	0.00	0.00	0
21	0.00	0.00	0.00	0.00	0.00	0.00	0.00	0.00	0.00	0.00	0.00	0
22	0.00	0.00	0.00	0.00	0.00	0.00	0.00	0.00	0.00	0.00	0.00	0
23	0.00	0.00	0.00	0.00	0.00	0.00	0.00	0.00	0.00	0.00	0.00	0
24	0.00	0.00	0.00	0.00	0.00	0.00	0.00	0.00	0.00	0.00	0.00	0
25	0.00	0.00	0.00	0.00	0.00	0.00	0.00	0.00	0.00	0.00	0.00	0
26	0.00	0.00	0.00	0.00	0.00	0.00	0.00	0.00	0.00	0.00	0.00	0
27	0.00	0.00	0.00	0.00	0.00	0.00	0.00	0.00	0.00	0.00	0.00	0
28	0.00	0.00	0.00	0.00	0.00	0.00	0.00	0.00	0.00	0.00	0.01	0
29	0.00	0.00	0.00	0.00	0.00	0.00	0.00	0.00	0.00	0.00	0.00	0
30	0.00	0.00	0.00	0.00	0.00	0.00	0.00	0.00	0.00	*****	*****	**
31	0.00	0.00	0.00	0.00	0.00	0.00	0.00	0.00	0.00	0.00	0.00	0

DAY	13	14	15	16	17	18	19	20	21	22	23	
1	0.00	0.00	0.00	0.00	0.00	0.00	0.00	0.00	0.00	0.00	0.00	0
2	0.00	0.00	0.00	0.00	0.00	0.00	0.00	0.00	0.00	0.00	0.00	0
3	0.00	0.00	0.00	0.00	*****	*****	*****	*****	*****	*****	*****	**
4	0.00	0.00	*****	*****	*****	*****	*****	*****	*****	*****	*****	**
5	0.00	0.00	0.00	0.00	0.00	0.00	0.00	0.00	0.00	0.00	0.00	0
6	0.00	0.00	0.00	0.00	0.00	0.00	0.00	0.00	0.00	0.00	0.00	0
7	0.00	0.00	0.00	0.00	0.00	0.00	0.00	0.00	0.00	0.00	0.00	0
8	0.00	0.00	0.00	0.00	0.00	0.00	0.00	0.00	0.00	0.00	0.00	0
9	0.00	0.00	0.00	0.00	0.00	0.00	0.00	0.00	0.00	0.00	0.00	0
10	0.00	0.00	0.00	0.00	0.00	0.00	0.00	0.00	0.00	0.00	0.00	0
11	0.00	0.00	0.00	0.00	0.00	0.00	0.00	0.00	0.00	0.00	0.00	0
12	0.00	0.00	0.00	0.00	0.00	0.00	0.00	0.00	0.00	0.00	0.00	0
13	0.00	0.00	0.00	0.00	0.00	0.00	0.00	0.00	0.00	0.00	0.00	0
14	0.00	0.00	0.00	0.00	0.00	0.00	0.00	0.00	0.00	0.00	0.00	0
15	0.00	0.00	0.00	0.00	0.00	0.00	0.00	0.00	0.00	0.00	0.00	0
16	0.00	0.00	0.00	0.00	0.00	0.00	0.00	0.00	0.00	0.00	0.00	0
17	0.00	0.00	0.00	0.00	0.00	0.00	0.00	0.00	0.00	0.00	0.00	0
18	0.00	0.00	0.00	0.00	0.00	0.00	0.00	0.00	0.00	0.00	0.00	0
19	0.00	0.00	0.00	0.00	0.00	0.00	0.00	0.00	0.00	0.00	0.00	0
20	0.00	0.00	0.00	0.00	0.00	0.00	0.00	0.00	0.00	0.00	0.00	0
21	0.00	0.00	0.00	0.00	0.00	0.00	0.00	0.00	0.00	0.00	0.00	0
22	0.00	0.00	0.00	0.00	0.00	0.00	0.00	0.00	0.00	0.00	0.00	0
23	0.00	0.00	0.00	0.00	0.00	0.00	0.00	0.00	0.00	0.00	0.00	0
24	0.00	0.00	0.00	0.00	0.00	0.00	0.00	0.00	0.00	0.00	0.00	0
25	0.00	0.00	0.00	0.00	0.00	0.00	0.00	0.00	0.00	0.00	0.00	0
26	0.00	0.00	0.00	0.00	0.00	0.00	0.00	0.00	0.00	0.00	0.00	0
27	0.00	0.00	0.00	0.00	0.00	0.00	0.00	0.00	0.01	0.01	0.00	0
28	0.00	0.00	0.00	0.00	0.00	0.00	0.00	0.00	0.00	0.00	0.00	0
29	0.00	0.00	0.00	0.00	0.00	0.00	0.00	0.00	0.00	0.00	0.00	0
30	0.00	0.00	0.00	0.00	0.00	0.00	0.00	0.00	0.00	0.00	0.00	0
31	0.00	0.00	0.00	0.00	0.00	0.00	0.00	0.00	0.00	0.00	0.00	0

SULFUR DIOXIDE S050

FREQUENCY DISTRIBUTION TABLES

MONTH MAY 84

PERCENT OF READINGS WITH WIND DIRECTION

WIND DIRECTION	POLLUTANT OCC. HOURS	FREQUENCY OF OCCURRENCE %
N	0	0.0
NE	0	0.0
E	0	0.0
SE	0	0.0
S	2	50.0
SW	1	25.0
W	1	25.0
NW	0	0.0
CALM	0	0.0
INOP	0	0.0

FREQUENCY OF READINGS WITH WIND DIRECTION

WIND DIRECTION	HOURS OF WIND OCCURRENCE	HOURS OF READINGS	FREQUENCY OF READINGS WITH WIND
N	101	0	0.0
NE	76	0	0.0
E	65	0	0.0
SE	102	0	0.0
S	56	2	3.6
SW	31	1	3.2
W	102	1	1.0
NW	74	0	0.0
CALM	0	0	0.0
INOP	99	0	0.0

NOTE.1. READINGS CONSIDERED IN FREQUENCY DISTRIBUTION TABLES ARE THOSE GREATER THAN 0.0001 PPM

2. VALUE OF ****** INDICATES NO DATA AVAILABLE OR INSUFFICIENT DATA

3. WIND DATA UTILIZED FOR CORRELATION PURPOSES WAS MONITORED AT ST ALBERT S050

HYDROGEN SULFIDE (H2S) S050

PPB ONE HOUR AVERAGE

MONTH MAY 84

DAY	0001-0800 AVE.	NO.	0801-1600 AVE.	NO.	1601-2400 AVE.	NO.	FULL DAY AVE.	NO.	DAILY PEAK
1	0.00	8	0.00	8	0.00	8	0.00	24	0.0
2	0.00	8	0.00	8	0.00	8	0.00	24	0.0
3	0.00	8	0.00	8	0.00	2	0.00	18	0.0
4	0.0	0	0.0	0	0.0	0	0.0	0	0.0
5	0.0	0	0.0	0	0.0	0	0.0	0	0.0
6	0.0	0	0.0	0	0.0	0	0.0	0	0.0
7	0.0	0	0.0	0	0.0	0	0.0	0	0.0
8	0.0	0	0.00	6	0.00	8	0.00	14	0.0
9	0.00	8	0.00	8	0.00	8	0.00	24	0.0
10	0.00	8	0.00	8	0.00	8	0.00	24	0.0
11	0.00	8	0.00	8	0.00	8	0.00	24	0.0
12	0.00	8	0.00	8	0.00	8	0.00	24	0.0
13	0.00	8	0.00	8	0.00	8	0.00	24	0.0
14	0.00	8	0.00	8	0.00	8	0.00	24	0.0
15	0.00	8	0.00	8	0.00	8	0.00	24	0.0
16	0.00	8	0.00	8	0.00	8	0.00	24	0.0
17	0.00	8	0.00	8	0.00	8	0.00	24	0.0
18	0.00	8	0.00	8	0.00	8	0.00	24	0.0
19	0.00	8	0.00	8	0.00	8	0.00	24	0.0
20	0.00	8	0.00	8	0.00	6	0.00	22	0.0
21	0.00	3	0.00	1	0.0	0	0.00	4	0.0
22	0.00	1	0.00	4	0.00	8	0.00	13	0.0
23	0.00	8	0.00	8	0.00	8	0.00	24	0.0
24	0.00	8	0.00	8	0.00	8	0.00	24	0.0
25	0.25	8	0.00	8	0.00	8	0.08	24	1.0
26	0.00	8	0.00	8	0.00	8	0.00	24	0.0
27	0.00	8	0.00	8	0.00	8	0.00	24	0.0
28	0.00	8	0.00	8	0.00	8	0.00	24	0.0
29	0.00	8	0.00	8	0.00	8	0.00	24	0.0
30	0.00	8	0.00	5	0.00	8	0.00	21	0.0
31	0.00	8	0.00	8	0.00	8	0.00	24	0.0

SUMMARY OF PEAK READINGS, PEAK AVERAGES, MONTHLY STATS

PEAK HOURLY READING 1.0 ON DAY 25 501 - 600 HOURS

WIND READINGS HOUR BEFORE/DURING /AFTER PEAK HOURLY READING

W 5 / W 3 / SW 3

PEAK CALENDAR DAY AVG. 0.08 ON DAY 25

ARITHMETIC MEAN 0.00 NO. RDGS. 596 HRS. (%OPER. 80.11%)

COMPARISON TO CLEAN AIR (MAXIMUM LEVELS) REGULATION

	REGULATIONS	NO.IN EXCESS OF REGULATION	% OF TIME PER MONTH THAT REG. WAS EXCEEDED
1-HOUR	10.00	0	0.0
24-HOUR	3.00	0	0.0

COMPARISON TO 24-HOUR REGULATION WAS ON A CALENDAR DAY BASIS ONLY

FREQUENCY DISTRIBUTION

RANGE	NO.OF RDGS.	PERCENT	CUMULATIVE
0.0 - 0.000	594	99.7	99.7
0.001 - 1.500	2	0.3	100.0
1.501 - 3.999	0	0.0	100.0
4.000 - 7.999	0	0.0	100.0
8.000 OR OVER	0	0.0	100.0

ALL MEANS ARE ARITHMETIC UNLESS OTHERWISE SPECIFIED

HYDROGEN SULFIDE (H2S) S050

PPB ONE HOUR AVERAGE

MONTH MAY 84

DAY	1	2	3	4	5	6	7	8	9	10	11	12
1	0.0	0.0	0.0	0.0	0.0	0.0	0.0	0.0	0.0	0.0	0.0	0.0
2	0.0	0.0	0.0	0.0	0.0	0.0	0.0	0.0	0.0	0.0	0.0	0.0
3	0.0	0.0	0.0	0.0	0.0	0.0	0.0	0.0	0.0	0.0	0.0	0.0
4	*****	*****	*****	*****	*****	*****	*****	*****	*****	*****	*****	*****
5	*****	*****	*****	*****	*****	*****	*****	*****	*****	*****	*****	*****
6	*****	*****	*****	*****	*****	*****	*****	*****	*****	*****	*****	*****
7	*****	*****	*****	*****	*****	*****	*****	*****	*****	*****	*****	*****
8	*****	*****	*****	*****	*****	*****	*****	*****	*****	*****	0.0	0.0
9	0.0	0.0	0.0	0.0	0.0	0.0	0.0	0.0	0.0	0.0	0.0	0.0
10	0.0	0.0	0.0	0.0	0.0	0.0	0.0	0.0	0.0	0.0	0.0	0.0
11	0.0	0.0	0.0	0.0	0.0	0.0	0.0	0.0	0.0	0.0	0.0	0.0
12	0.0	0.0	0.0	0.0	0.0	0.0	0.0	0.0	0.0	0.0	0.0	0.0
13	0.0	0.0	0.0	0.0	0.0	0.0	0.0	0.0	0.0	0.0	0.0	0.0
14	0.0	0.0	0.0	0.0	0.0	0.0	0.0	0.0	0.0	0.0	0.0	0.0
15	0.0	0.0	0.0	0.0	0.0	0.0	0.0	0.0	0.0	0.0	0.0	0.0
16	0.0	0.0	0.0	0.0	0.0	0.0	0.0	0.0	0.0	0.0	0.0	0.0
17	0.0	0.0	0.0	0.0	0.0	0.0	0.0	0.0	0.0	0.0	0.0	0.0
18	0.0	0.0	0.0	0.0	0.0	0.0	0.0	0.0	0.0	0.0	0.0	0.0
19	0.0	0.0	0.0	0.0	0.0	0.0	0.0	0.0	0.0	0.0	0.0	0.0
20	0.0	0.0	0.0	0.0	0.0	0.0	0.0	0.0	0.0	0.0	0.0	0.0
21	0.0	0.0	0.0	*****	*****	*****	*****	*****	*****	*****	*****	*****
22	*****	*****	*****	*****	0.0	*****	*****	*****	*****	*****	*****	*****
23	0.0	0.0	0.0	0.0	0.0	0.0	0.0	0.0	0.0	0.0	0.0	0.0
24	0.0	0.0	0.0	0.0	0.0	0.0	0.0	0.0	0.0	0.0	0.0	0.0
25	0.0	0.0	0.0	0.0	0.0	1.0	1.0	0.0	0.0	0.0	0.0	0.0
26	0.0	0.0	0.0	0.0	0.0	0.0	0.0	0.0	0.0	0.0	0.0	0.0
27	0.0	0.0	0.0	0.0	0.0	0.0	0.0	0.0	0.0	0.0	0.0	0.0
28	0.0	0.0	0.0	0.0	0.0	0.0	0.0	0.0	0.0	0.0	0.0	0.0
29	0.0	0.0	0.0	0.0	0.0	0.0	0.0	0.0	0.0	0.0	0.0	0.0
30	0.0	0.0	0.0	0.0	0.0	0.0	0.0	0.0	0.0	*****	*****	*****
31	0.0	0.0	0.0	0.0	0.0	0.0	0.0	0.0	0.0	0.0	0.0	0.0

DAY	13	14	15	16	17	18	19	20	21	22	23	24
1	0.0	0.0	0.0	0.0	0.0	0.0	0.0	0.0	0.0	0.0	0.0	0.0
2	0.0	0.0	0.0	0.0	0.0	0.0	0.0	0.0	0.0	0.0	0.0	0.0
3	0.0	0.0	0.0	0.0	0.0	0.0	*****	*****	*****	*****	*****	*****
4	*****	*****	*****	*****	*****	*****	*****	*****	*****	*****	*****	*****
5	*****	*****	*****	*****	*****	*****	*****	*****	*****	*****	*****	*****
6	*****	*****	*****	*****	*****	*****	*****	*****	*****	*****	*****	*****
7	*****	*****	*****	*****	*****	*****	*****	*****	*****	*****	*****	*****
8	0.0	0.0	0.0	0.0	0.0	0.0	0.0	0.0	0.0	0.0	0.0	0.0
9	0.0	0.0	0.0	0.0	0.0	0.0	0.0	0.0	0.0	0.0	0.0	0.0
10	0.0	0.0	0.0	0.0	0.0	0.0	0.0	0.0	0.0	0.0	0.0	0.0
11	0.0	0.0	0.0	0.0	0.0	0.0	0.0	0.0	0.0	0.0	0.0	0.0
12	0.0	0.0	0.0	0.0	0.0	0.0	0.0	0.0	0.0	0.0	0.0	0.0
13	0.0	0.0	0.0	0.0	0.0	0.0	0.0	0.0	0.0	0.0	0.0	0.0
14	0.0	0.0	0.0	0.0	0.0	0.0	0.0	0.0	0.0	0.0	0.0	0.0
15	0.0	0.0	0.0	0.0	0.0	0.0	0.0	0.0	0.0	0.0	0.0	0.0
16	0.0	0.0	0.0	0.0	0.0	0.0	0.0	0.0	0.0	0.0	0.0	0.0
17	0.0	0.0	0.0	0.0	0.0	0.0	0.0	0.0	0.0	0.0	0.0	0.0
18	0.0	0.0	0.0	0.0	0.0	0.0	0.0	0.0	0.0	0.0	0.0	0.0
19	0.0	0.0	0.0	0.0	0.0	0.0	0.0	0.0	0.0	0.0	0.0	0.0
20	0.0	0.0	0.0	0.0	0.0	0.0	0.0	0.0	*****	*****	0.0	0.0
21	0.0	*****	*****	*****	*****	*****	*****	*****	*****	*****	*****	*****
22	0.0	0.0	0.0	0.0	0.0	0.0	0.0	0.0	0.0	0.0	0.0	0.0
23	0.0	0.0	0.0	0.0	0.0	0.0	0.0	0.0	0.0	0.0	0.0	0.0
24	0.0	0.0	0.0	0.0	0.0	0.0	0.0	0.0	0.0	0.0	0.0	0.0
25	0.0	0.0	0.0	0.0	0.0	0.0	0.0	0.0	0.0	0.0	0.0	0.0
26	0.0	0.0	0.0	0.0	0.0	0.0	0.0	0.0	0.0	0.0	0.0	0.0
27	0.0	0.0	0.0	0.0	0.0	0.0	0.0	0.0	0.0	0.0	0.0	0.0
28	0.0	0.0	0.0	0.0	0.0	0.0	0.0	0.0	0.0	0.0	0.0	0.0
29	0.0	0.0	0.0	0.0	0.0	0.0	0.0	0.0	0.0	0.0	0.0	0.0
30	0.0	0.0	0.0	0.0	0.0	0.0	0.0	0.0	0.0	0.0	0.0	0.0
31	0.0	0.0	0.0	0.0	0.0	0.0	0.0	0.0	0.0	0.0	0.0	0.0

HYDROGEN SULFIDE (H2S) S050

FREQUENCY DISTRIBUTION TABLES

MONTH MAY 84

PERCENT OF READINGS WITH WIND DIRECTION

WIND DIRECTION	POLLUTANT OCC. HOURS	FREQUENCY OF OCCURRENCE %
N	0	0.0
NE	0	0.0
E	0	0.0
SE	0	0.0
S	0	0.0
SW	1	50.0
W	1	50.0
NW	0	0.0
CALM	0	0.0
INOP	0	0.0

FREQUENCY OF READINGS WITH WIND DIRECTION

WIND DIRECTION	HOURS OF WIND OCCURRENCE	HOURS OF READINGS	FREQUENCY OF READINGS WITH WIND
N	81	0	0.0
NE	51	0	0.0
E	61	0	0.0
SE	97	0	0.0
S	50	0	0.0
SW	29	1	3.4
W	92	1	1.1
NW	69	0	0.0
CALM	0	0	0.0
INOP	66	0	0.0

NOTE.1. READINGS CONSIDERED IN FREQUENCY DISTRIBUTION TABLES ARE THOSE GREATER THAN 0.0001 PPB

2. VALUE OF ****** INDICATES NO DATA AVAILABLE OR INSUFFICIENT DATA

3. WIND DATA UTILIZED FOR CORRELATION PURPOSES WAS MONITORED AT ST ALBERT S050

ALBERTA ENVIRONMENT
DIVISION OF POLLUTION CONTROL
AIR QUALITY CONTROL BRANCH

WIND FREQUENCY TABLE

STATION: ST ALBERT S050

MONTH: JUNE 1984

INSTRUMENT TYPE: ATHABASCA RES.

DIRECTION	DEGREES	TOTAL HOURS	PERCENT	AVERAGE SPEED IN KM/H
N	338 TO 22	83	11.53	9.9
NE	23 TO 67	70	9.72	9.5
E	68 TO 112	89	12.36	9.0
SE	113 TO 157	63	8.75	10.0
S	158 TO 202	56	7.78	8.7
SW	203 TO 247	78	10.83	5.9
W	248 TO 292	167	23.19	8.2
NW	293 TO 337	110	15.28	15.2
CALM	0 TO 000	4	0.56	

AVERAGE WIND SPEED 9.6 KM/H

WIND INSTRUMENT OPERATIONAL 720 HOURS (100.00%)

AMBIENT AIR MONITORING REPORT FOR THE MONTH OF JUNE 1984

STATION: ST ALBER S050

POLLUTANT	MONITOR	RANGE MAX.	PEAK HOURLY	PEAK DAILY	MONTH MEAN	% OPER
NOX		PPM	0.09	0.03	0.02	95.7
NO		PPM	0.05	0.02	0.01	95.7
NO2		PPM	0.04	0.02	0.00	95.7
SO2		PPM	0.02	0.00	0.00	98.1
H2S		PPB	2.0	0.33	0.02	81.5

@ NOTE CARBON MONOXIDE CONTAINS PEAK 8-HR AVERAGE INSTEAD OF PEAK DAILY AVERAGE

S050 JUNE 84

COMPARISON TO CLEAN AIR (MAXIMUM LEVELS) REGULATION

POLLUTANT	REGULATIONS		NO.IN EXCESS OF REGULATION	% OF TIME PER MONTH THAT REG. WAS EXCEEDED
NO2	1-HOUR	0.21 PPM	0	0.0
	24-HOUR	0.11 PPM	0	0.0
SO2	1-HOUR	0.17 PPM	0	0.0
	24-HOUR	0.06 PPM	0	0.0
H2S	1-HOUR	10.00 PPB	0	0.0
	24-HOUR	3.00 PPB	0	0.0

NOTE. COMPARISON TO 8-HOUR REGULATION WAS WITH TIME PERIODS 0001 - 0800 0801 - 1600 AND 1601 - 2400

NOTE. COMPARISON TO 24-HOUR REGULATION WAS ON A CALENDAR DAY BASIS ONLY

NOTE. OTHER POLLUTANTS NOT SPECIFIED IN THE CLEAN AIR (MAXIMUM LEVELS) REGULATIONS

S050 JUNE 84

WIND DIRECTION AND WIND SPEED (KM/H)

DAY	1	2	3	4	5	6	7	8	9	10	11	12	13	14	15	16	17	18	19	20	21	22	23
1	NW	NW	NW	N	NW	NW	NW	NW	NW	NW	NW	NW	NW	NW	NW	NW	NW	NW	NW	NW	NW	NW	NW
	28	28	36	36	28	28	36	36	36	36	28	28	36	28	28	28	25	25	25	21	18	14	10
2	NW	NW	NW	NW	NW	NW	NW	NW	NW	NW	NW	NW	NW	NW	NW	NW	NW	NW	N	N	N	N	N
	18	18	14	18	18	18	18	18	21	18	21	21	18	18	21	18	18	14	10	10	7	3	3
3	W	W	NW	NW	NW	W	W	W	N	N	NE	NE	N	N	N	N	N	N	N	NE	N	NE	NE
	3	7	7	3	3	7	7	7	9	9	9	7	9	10	10	10	10	10	10	10	9	9	7
4	NE	NE	NE	NE	NE	E	E	E	E	E	E	E	E	E	E	SE	NE	NE	NE	NE	E	E	SE
	7	9	9	9	9	7	7	7	7	10	14	14	14	18	18	18	18	18	18	18	14	14	18
5	SE	SE	E	NE	NE	NE	NE	NE	E	E	E	E	E	SE	SE	SE	S	SE	SE	SE	NE	E	SE
	10	10	10	14	14	14	14	10	7	7	7	10	18	14	10	10	10	18	18	7	7	7	7
6	SE	SE	SE	E	E	SE	SE	SE	SE	SE	SE	SE	SE	SE	SE	SE	SE	SE	SE	E	E	E	E
	7	7	7	7	10	10	10	10	10	10	10	10	10	10	10	10	10	14	10	10	10	9	9
7	E	E	E	E	E	NE	NE	NE	NE	NE	SE	SE	SE	SE	SE	SE	SE	E	NE	N	NW	W	SW
	9	9	9	10	10	10	10	9	10	9	10	14	18	14	14	10	10	9	9	9	7	7	5
8	W	NW	NW	N	N	NE	NE	NE	NE	NE	NE	NE	NE	NE	E	E	S	S	S	W	W	S	S
	7	9	9	9	9	9	9	9	10	14	18	18	21	18	18	14	14	9	9	7	7	5	3
9	SE	E	E	E	E	E	E	E	E	E	E	E	E	E	SE	S	S	S	S	SW	W	W	W
	3	5	7	7	7	7	7	10	10	10	10	10	14	10	9	9	9	9	9	9	9	9	9
10	W	W	SW	SW	SW	SW	SW	SW	SW	SW	SW	SW	SW	SW	SW	SW	SW	SW	SW	SW	SW	SW	SW
	5	5	3	5	7	9	9	10	10	10	10	10	10	9	9	9	9	9	9	9	7	7	7
11	SW	SW	SW	W	W	W	W	W	SW	SW	S	E	E	E	E	E	E	E	E	E	S	SW	W
	7	5	3	3	3	5	7	7	3	3	5	7	10	10	7	7	7	7	7	7	7	7	7
12	E	NE	NE	NE	NE	NE	E	E	E	E	E	E	E	E	SE	SE	SE	SE	SE	SE	W	SW	E
	7	7	7	7	7	7	7	7	7	9	9	9	9	9	9	10	18	14	10	7	9	7	7
13	S	S	SW	SE	SE	SE	SE	SE	S	S	S	S	S	S	S	S	S	S	S	W	NE	E	S
	3	3	5	3	5	5	7	9	9	10	10	10	10	10	14	14	14	10	10	7	5	5	5
14	SW	W	SW	SW	SW	SW	SW	W	W	W	W	W	W	W	W	W	W	W	W	W	W	N	N
	7	7	5	3	5	5	7	9	9	9	10	9	9	9	7	7	7	7	5	3	7	18	14
15	E	N	N	NE	N	NW	NW	NW	NW	NW	NW	W	W	W	W	W	W	W	SW	SW	SW	SW	SW
	7	7	10	3	7	10	10	7	10	10	10	7	7	7	7	7	7	5	3	3	3	3	3
16	W	W	W	W	W	W	W	W	W	NW	N	N	N	N	N	N	N	N	N	N	N	N	N
	7	7	7	7	3	7	7	10	14	18	18	18	21	21	25	25	25	18	14	14	7	7	9
17	W	W	W	W	W	W	NW	N	N	N	N	NW	NW	NW	NW	NW	NW	NW	NW	NW	W	W	W
	7	7	7	7	7	7	10	10	10	10	14	18	18	14	14	14	14	21	7	7	7	7	7
18	W	W	W	SW	SW	S	S	S	NW	NE	E	SE	SE	SE	N	NE	NE	E	E	E	NE	NE	N
	7	7	7	3	3	1	3	7	10	10	10	10	10	7	10	14	14	10	10	7	7	3	3
19	N	N	N	N	NE	NE	N	N	N	N	N	N	N	N	NE	N	N	NW	N	N	N	N	SE
	5	3	5	7	9	9	7	7	9	9	10	14	18	10	7	7	9	9	10	7	3	1	1
20	N	SW	SW	SW	SW	SW	W	W	W	W	SW	W	W	W	W	W	W	W	N	N	S	S	SW
	3	3	3	3	3	3	7	7	7	7	7	7	7	7	7	7	7	7	7	7	7	7	3
21	SW	W	W	W	W	W	W	W	W	W	W	W	W	W	W	NW	W	SW	SW	SW	NE	W	W
	3	3	3	3	3	3	7	7	7	7	7	7	7	7	7	7	7	7	7	7	10	7	3
22	NW	NW	NW	N	N	NW	N	N	NE	NE	NE	NE	N	N	N	C	NE	NE	NW	SW	W	W	N
	3	3	3	7	3	3	7	7	7	7	7	7	7	7	7	0	7	7	3	3	3	7	3
23	W	W	W	W	W	W	SW	W	SW	SW	SW	SW	W	W	W	SW	W	W	SW	NE	E	E	E
	7	3	3	3	3	3	3	3	7	7	7	7	7	7	7	7	7	7	10	7	7	7	7
24	SE	S	S	SW	W	SW	W	SW	W	NW	NW	NW	NW	NW	NW	W	NW	SE	N	NE	NE	NE	W
	7	3	7	3	7	3	7	3	7	7	10	10	7	7	7	7	14	3	7	10	7	3	3
25	NW	NW	N	SW	W	NW	NW	W	W	W	W	W	W	W	W	SW	SW	W	W	W	N	W	W
	7	10	7	7	7	10	10	7	7	7	10	10	10	18	14	7	10	14	7	3	3	3	3
26	SW	W	NW	NW	NW	NW	NW	NW	W	S	S	S	S	S	S	S	S	S	SE	SE	SE	S	S
	7	7	14	10	7	10	14	14	7	7	7	10	10	14	14	14	10	10	10	10	14	7	7
27	W	W	NW	NW	NW	W	NW	NW	NW	NW	NW	NW	NW	NW	N	N	S	S	S	S	S	S	S
	7	7	14	10	7	10	14	14	14	10	10	7	10	10	7	7	7	10	14	10	10	10	10
28	W	W	C	C	C	NE	SW	W	NW	N	W	NE	NE	NE	E	E	E	E	E	E	E	E	E
	3	3	0	0	0	3	3	7	7	7	7	7	7	7	7	7	7	7	7	7	10	10	7
29	E	SE	NW	NE	NE	L	NW	NW	E	S	S	SW	SW	SE	SE	W	NW	NW	N	N	NW	NW	NW
	7	7	7	7	7	7	7	3	3	7	7	3	3	14	18	18	25	21	18	18	14	18	18
30	W	W	W	W	W	W	W	W	W	W	W	W	NW	W	W	W	W	W	W	W	W	W	W
	14	10	14	14	14	14	14	21	21	28	28	32	28	18	10	14	21	25	25	18	10	7	3

OXIDES OF NITROGEN - NOX S050

PPM ONE HOUR AVERAGE

MONTH JUNE 84

DAY	0001-0800 AVE.	NO.	0801-1600 AVE.	NO.	1601-2400 AVE.	NO.	FULL DAY AVE.	NO.	DAILY PEAK
1	0.02	8	0.01	8	0.01	8	0.02	24	0.04
2	0.01	8	0.02	8	0.03	8	0.02	24	0.06
3	0.03	8	0.02	8	0.03	8	0.03	24	0.04
4	0.03	8	0.02	8	0.02	8	0.02	24	0.05
5	0.02	8	0.03	8	0.02	8	0.02	24	0.04
6	0.03	8	0.02	8	0.03	8	0.03	24	0.04
7	0.03	8	0.02	8	0.02	8	0.02	24	0.03
8	0.02	8	0.01	8	0.01	8	0.01	24	0.03
9	0.01	8	0.01	8	0.01	8	0.01	24	0.02
10	0.02	8	0.01	8	0.01	8	0.01	24	0.02
11	0.01	8	0.01	8	0.01	8	0.01	24	0.02
12	0.01	8	0.02	8	0.01	8	0.01	24	0.03
13	0.01	8	0.02	8	0.01	8	0.01	24	0.02
14	0.02	8	0.02	8	0.02	8	0.02	24	0.03
15	0.01	8	0.01	8	0.01	8	0.01	24	0.02
16	0.02	8	0.01	8	0.01	8	0.02	24	0.03
17	0.03	8	0.02	8	0.02	8	0.02	24	0.04
18	0.03	8	0.02	8	0.02	8	0.02	24	0.03
19	0.02	8	0.02	8	0.02	8	0.02	24	0.03
20	0.02	8	0.02	8	0.02	8	0.02	24	0.03
21	0.02	8	0.01	6	0.0	0	0.02	14	0.04
22	0.0	0	0.02	3	0.02	8	0.02	11	0.03
23	0.02	8	0.00	8	0.01	8	0.01	24	0.03
24	0.01	8	0.00	8	0.01	8	0.01	24	0.03
25	0.00	7	0.00	6	0.01	8	0.01	21	0.03
26	0.02	7	0.03	8	0.02	8	0.02	23	0.09
27	0.01	7	0.00	8	0.02	8	0.01	23	0.05
28	0.02	7	0.02	8	0.01	8	0.02	23	0.04
29	0.02	7	0.02	8	0.00	8	0.01	23	0.06
30	0.00	7	0.00	8	0.00	8	0.00	23	0.01

SUMMARY OF PEAK READINGS, PEAK AVERAGES, MONTHLY STATS

PEAK HOURLY READING 0.09 ON DAY 26 801 - 900 HOURS

WIND READINGS HOUR BEFORE/DURING /AFTER PEAK HOURLY READING

NW 14 / W 7 / S 7

PEAK CALENDAR DAY AVG. 0.03 ON DAY 3

ARITHMETIC MEAN 0.02 NO. RDGS. 689 HRS. (%OPER. 95.69%)

POLLUTANT NOT SPECIFIED IN THE CLEAN AIR (MAXIMUM LEVELS) REGULATIONS

FREQUENCY DISTRIBUTION

RANGE	NO.OF RDGS.	PERCENT	CUMULATIVE
0.0 - 0.000	110	16.0	16.0
0.001 - 0.110	579	84.0	100.0
0.111 - 0.210	0	0.0	100.0
0.211 - 0.420	0	0.0	100.0
0.421 OR OVER	0	0.0	100.0

ALL MEANS ARE ARITHMETIC UNLESS OTHERWISE SPECIFIED

OXIDES OF NITROGEN - NOX S050

PPM ONE HOUR AVERAGE

MONTH JUNE 84

DAY	1	2	3	4	5	6	7	8	9	10	11	12
1	0.02	0.02	0.02	0.02	0.02	0.04	0.03	0.02	0.01	0.00	0.02	0.01
2	0.01	0.01	0.01	0.01	0.02	0.02	0.02	0.02	0.01	0.02	0.03	0.03
3	0.03	0.03	0.03	0.04	0.03	0.03	0.02	0.02	0.03	0.03	0.01	0.02
4	0.03	0.03	0.03	0.02	0.02	0.03	0.04	0.04	0.04	0.05	0.04	0.03
5	0.03	0.03	0.03	0.01	0.01	0.02	0.03	0.04	0.03	0.03	0.04	0.03
6	0.03	0.04	0.03	0.03	0.02	0.02	0.02	0.03	0.04	0.02	0.02	0.01
7	0.03	0.03	0.03	0.03	0.02	0.02	0.02	0.03	0.03	0.03	0.02	0.02
8	0.02	0.01	0.01	0.01	0.02	0.03	0.02	0.00	0.00	0.00	0.03	0.00
9	0.02	0.02	0.01	0.00	0.00	0.01	0.01	0.01	0.01	0.01	0.00	0.00
10	0.01	0.01	0.02	0.02	0.02	0.02	0.02	0.02	0.02	0.02	0.01	0.01
11	0.01	0.00	0.00	0.01	0.01	0.01	0.01	0.01	0.01	0.01	0.01	0.01
12	0.02	0.02	0.02	0.01	0.01	0.01	0.02	0.01	0.01	0.02	0.03	0.03
13	0.00	0.01	0.01	0.01	0.01	0.01	0.01	0.00	0.00	0.01	0.01	0.02
14	0.02	0.02	0.03	0.03	0.02	0.03	0.03	0.02	0.02	0.02	0.02	0.02
15	0.01	0.01	0.01	0.01	0.01	0.01	0.01	0.01	0.01	0.01	0.01	0.02
16	0.02	0.03	0.03	0.02	0.03	0.02	0.02	0.02	0.02	0.01	0.01	0.01
17	0.00	0.03	0.04	0.03	0.03	0.03	0.03	0.02	0.02	0.02	0.02	0.02
18	0.02	0.03	0.03	0.03	0.03	0.03	0.03	0.03	0.02	0.02	0.02	0.02
19	0.02	0.02	0.02	0.03	0.03	0.03	0.03	0.02	0.02	0.02	0.02	0.02
20	0.02	0.01	0.02	0.02	0.02	0.03	0.03	0.02	0.02	0.02	0.02	0.02
21	0.04	0.01	0.01	0.01	0.01	0.02	0.03	0.03	0.02	0.01	0.01	0.01
22	*****	*****	*****	*****	*****	*****	*****	*****	*****	*****	*****	*****
23	0.02	0.03	0.02	0.02	0.01	0.01	0.01	0.01	0.01	0.01	0.00	0.00
24	0.03	0.03	0.03	0.00	0.00	0.00	0.00	0.00	0.00	0.00	0.00	0.00
25	0.00	0.00	0.00	0.00	0.00	0.00	*****	0.01	0.01	0.00	*****	0.00
26	0.01	0.01	0.02	0.03	0.02	0.02	*****	0.05	0.09	0.04	0.03	0.02
27	0.02	0.02	0.01	0.00	0.00	0.00	*****	0.00	0.00	0.00	0.00	0.00
28	0.01	0.01	0.02	0.02	0.03	0.04	*****	0.04	0.03	0.02	0.02	0.03
29	0.02	0.02	0.02	0.02	0.01	0.01	*****	0.02	0.03	0.03	0.06	0.03
30	0.00	0.00	0.00	0.00	0.00	0.00	*****	0.00	0.00	0.00	0.00	0.00

DAY	13	14	15	16	17	18	19	20	21	22	23	24
1	0.01	0.01	0.01	0.01	0.02	0.02	0.02	0.02	0.01	0.01	0.01	0.00
2	0.02	0.02	0.02	0.02	0.01	0.01	0.01	0.01	0.03	0.05	0.05	0.06
3	0.02	0.02	0.03	0.03	0.02	0.02	0.02	0.02	0.04	0.04	0.04	0.0[illegible]
4	0.01	0.01	0.01	0.01	0.01	0.01	0.01	0.02	0.02	0.02	0.02	0.0[illegible]
5	0.02	0.02	0.02	0.03	0.02	0.02	0.02	0.02	0.02	0.02	0.02	0.0[illegible]
6	0.01	0.01	0.02	0.03	0.04	0.03	0.03	0.03	0.04	0.02	0.02	0.0[illegible]
7	0.01	0.01	0.02	0.02	0.02	0.03	0.02	0.02	0.01	0.01	0.01	0.0[illegible]
8	0.01	0.00	0.01	0.01	0.01	0.01	0.01	0.01	0.01	0.01	0.01	0.01
9	0.00	0.00	0.01	0.01	0.02	0.02	0.01	0.00	0.00	0.00	0.00	0.00
10	0.01	0.01	0.01	0.02	0.01	0.01	0.01	0.01	0.01	0.01	0.01	0.01
11	0.01	0.01	0.01	0.01	0.01	0.01	0.01	0.02	0.02	0.01	0.01	0.01
12	0.02	0.02	0.01	0.01	0.01	0.01	0.01	0.01	0.01	0.01	0.01	0.01
13	0.02	0.02	0.02	0.02	0.02	0.02	0.02	0.02	0.01	0.01	0.01	0.01
14	0.02	0.02	0.01	0.01	0.01	0.02	0.02	0.02	0.02	0.02	0.02	0.02
15	0.02	0.02	0.02	0.01	0.01	0.01	0.01	0.01	0.01	0.01	0.01	0.01
16	0.01	0.02	0.02	0.02	0.02	0.02	0.01	0.01	0.01	0.01	0.00	0.00
17	0.03	0.03	0.02	0.02	0.02	0.02	0.02	0.02	0.01	0.02	0.02	0.02
18	0.02	0.02	0.03	0.03	0.02	0.03	0.01	0.02	0.03	0.03	0.03	0.02
19	0.02	0.02	0.02	0.02	0.02	0.02	0.02	0.02	0.02	0.02	0.02	0.02
20	0.02	0.02	0.02	0.02	0.02	0.02	0.02	0.02	0.02	0.02	0.02	0.03
21	0.01	0.01	*****	*****	*****	*****	*****	*****	*****	*****	*****	*****
22	*****	0.02	0.02	0.02	0.02	0.02	0.02	0.03	0.03	0.02	0.02	0.02
23	0.00	0.00	0.00	0.00	0.00	0.00	0.00	0.00	0.00	0.01	0.01	0.02
24	0.00	0.00	0.00	0.00	0.00	0.00	0.00	0.01	0.01	0.01	0.01	0.00
25	0.00	0.00	*****	0.01	0.01	0.01	0.01	0.01	0.01	0.02	0.03	0.02
26	0.01	0.01	0.01	0.01	0.01	0.01	0.02	0.02	0.02	0.03	0.03	0.02
27	0.00	0.00	0.00	0.00	0.01	0.01	0.02	0.02	0.02	0.02	0.02	0.05
28	0.03	0.01	0.00	0.00	0.00	0.00	0.01	0.01	0.01	0.02	0.02	0.02
29	0.01	0.01	0.01	0.01	0.00	0.00	0.00	0.00	0.00	0.00	0.00	0.00
30	0.00	0.00	0.00	0.00	0.00	0.00	0.00	0.00	0.00	0.00	0.00	0.01

OXIDES OF NITROGEN - NOX S050

FREQUENCY DISTRIBUTION TABLES

MONTH JUNE 84

PERCENT OF READINGS WITH WIND DIRECTION

WIND DIRECTION	POLLUTANT OCC. HOURS	FREQUENCY OF OCCURRENCE %
N	56	15.1
NE	40	10.8
E	48	13.0
SE	41	11.1
S	32	8.6
SW	29	7.8
W	73	19.7
NW	47	12.7
CALM	4	1.1
INOP	0	0.0

FREQUENCY OF READINGS WITH WIND DIRECTION

WIND DIRECTION	HOURS OF WIND OCCURRENCE	HOURS OF READINGS	FREQUENCY OF READINGS WITH WIND
N	78	56	71.8
NE	65	40	61.5
E	89	48	53.9
SE	63	41	65.1
S	56	32	57.1
SW	74	29	39.2
W	159	73	45.9
NW	101	47	46.5
CALM	4	4	100.0
INOP	0	0	0.0

NOTE.1. READINGS CONSIDERED IN FREQUENCY DISTRIBUTION TABLES ARE THOSE GREATER THAN 0.0100 PPM

2. VALUE OF ****** INDICATES NO DATA AVAILABLE OR INSUFFICIENT DATA

3. WIND DATA UTILIZED FOR CORRELATION PURPOSES WAS MONITORED AT ST ALBERT S050

OXIDES OF NITROGEN - NO 5050

PPM ONE HOUR AVERAGE

MONTH JUNE 84

DAY	0001-0800 AVE.	NO.	0801-1600 AVE.	NO.	1601-2400 AVE.	NO.	FULL DAY AVE.	NO.	DAILY PEAK
1	0.02	8	0.01	8	0.01	8	0.01	24	0.03
2	0.01	8	0.02	8	0.02	8	0.02	24	0.04
3	0.01	8	0.01	8	0.02	8	0.02	24	0.03
4	0.02	8	0.02	8	0.01	8	0.02	24	0.04
5	0.02	8	0.02	8	0.01	8	0.02	24	0.03
6	0.02	8	0.01	8	0.02	8	0.02	24	0.03
7	0.02	8	0.01	8	0.01	8	0.01	24	0.03
8	0.01	8	0.01	8	0.01	8	0.01	24	0.02
9	0.01	8	0.01	8	0.00	8	0.01	24	0.02
10	0.02	8	0.01	8	0.01	8	0.01	24	0.02
11	0.00	8	0.01	8	0.01	8	0.01	24	0.02
12	0.01	8	0.02	8	0.01	8	0.01	24	0.03
13	0.01	8	0.02	8	0.01	8	0.01	24	0.02
14	0.02	8	0.01	8	0.01	8	0.02	24	0.03
15	0.01	8	0.01	8	0.01	8	0.01	24	0.01
16	0.02	8	0.01	8	0.01	8	0.02	24	0.03
17	0.02	8	0.02	8	0.02	8	0.02	24	0.03
18	0.03	8	0.02	8	0.02	8	0.02	24	0.03
19	0.02	8	0.02	8	0.02	8	0.02	24	0.03
20	0.02	8	0.02	8	0.02	8	0.02	24	0.03
21	0.02	8	0.01	6	0.0	0	0.01	14	0.03
22	0.0	0	0.01	3	0.01	8	0.01	11	0.01
23	0.01	8	0.00	8	0.00	8	0.00	24	0.01
24	0.00	8	0.00	8	0.00	8	0.00	24	0.02
25	0.00	7	0.00	6	0.00	8	0.00	21	0.01
26	0.01	7	0.01	8	0.00	8	0.01	23	0.05
27	0.00	7	0.00	8	0.00	8	0.00	23	0.02
28	0.01	7	0.01	8	0.00	8	0.00	23	0.02
29	0.00	7	0.01	8	0.00	8	0.00	23	0.02
30	0.00	7	0.00	8	0.00	8	0.00	23	0.00

SUMMARY OF PEAK READINGS, PEAK AVERAGES, MONTHLY STATS

PEAK HOURLY READING 0.05 ON DAY 26 801 - 900 HOURS

WIND READINGS HOUR BEFORE/DURING /AFTER PEAK HOURLY READING

NW 14 / W 7 / S 7

PEAK CALENDAR DAY AVG. 0.02 ON DAY 18

ARITHMETIC MEAN 0.01 NO. RDGS. 689 HRS. (%OPER. 95.69%)

POLLUTANT NOT SPECIFIED IN THE CLEAN AIR (MAXIMUM LEVELS) REGULATIONS

FREQUENCY DISTRIBUTION

RANGE	NO.OF RDGS.	PERCENT	CUMULATIVE
0.0 - 0.000	191	27.7	27.7
0.001 - 0.110	498	72.3	100.0
0.111 - 0.210	0	0.0	100.0
0.211 - 0.420	0	0.0	100.0
0.421 OR OVER	0	0.0	100.0

ALL MEANS ARE ARITHMETIC UNLESS OTHERWISE SPECIFIED

OXIDES OF NITROGEN - NO S050

PPM ONE HOUR AVERAGE

MONTH JUNE 84

DAY	1	2	3	4	5	6	7	8	9	10	11	12
1	0.02	0.02	0.02	0.02	0.02	0.03	0.03	0.02	0.01	0.00	0.02	0.
2	0.01	0.01	0.01	0.01	0.02	0.02	0.02	0.02	0.01	0.02	0.02	0.
3	0.02	0.01	0.02	0.02	0.01	0.01	0.01	0.02	0.02	0.02	0.01	0.
4	0.02	0.02	0.02	0.01	0.01	0.02	0.03	0.03	0.02	0.04	0.03	0.
5	0.02	0.03	0.02	0.01	0.01	0.01	0.02	0.02	0.02	0.02	0.02	0.
6	0.03	0.03	0.03	0.02	0.02	0.02	0.02	0.02	0.02	0.01	0.00	0.
7	0.03	0.03	0.03	0.03	0.01	0.01	0.02	0.02	0.02	0.02	0.02	0.
8	0.02	0.01	0.01	0.01	0.02	0.02	0.02	0.00	0.00	0.00	0.02	0.
9	0.02	0.02	0.00	0.00	0.00	0.00	0.01	0.01	0.01	0.01	0.00	0.
10	0.01	0.01	0.02	0.02	0.02	0.02	0.02	0.02	0.02	0.02	0.01	0.
11	0.00	0.00	0.00	0.01	0.01	0.00	0.00	0.01	0.01	0.01	0.01	0.
12	0.02	0.02	0.02	0.01	0.01	0.01	0.01	0.01	0.01	0.02	0.03	0.
13	0.00	0.01	0.01	0.01	0.01	0.01	0.01	0.00	0.00	0.01	0.01	0.
14	0.02	0.02	0.02	0.03	0.02	0.02	0.02	0.02	0.02	0.01	0.01	0.
15	0.01	0.01	0.01	0.01	0.01	0.01	0.01	0.01	0.01	0.01	0.01	0.
16	0.02	0.03	0.03	0.02	0.03	0.02	0.02	0.02	0.02	0.01	0.01	0.
17	0.00	0.03	0.03	0.03	0.03	0.03	0.03	0.02	0.02	0.02	0.02	0.
18	0.02	0.03	0.03	0.03	0.03	0.03	0.03	0.03	0.02	0.02	0.02	0.
19	0.02	0.02	0.02	0.03	0.03	0.03	0.03	0.02	0.02	0.02	0.02	0.
20	0.01	0.01	0.02	0.02	0.02	0.03	0.03	0.02	0.02	0.02	0.02	0.
21	0.03	0.01	0.01	0.01	0.01	0.02	0.03	0.02	0.01	0.01	0.01	0.
22	*****	*****	*****	*****	*****	*****	*****	*****	*****	*****	*****	***
23	0.00	0.00	0.00	0.00	0.01	0.01	0.01	0.01	0.01	0.01	0.00	0.
24	0.00	0.00	0.02	0.00	0.00	0.00	0.00	0.00	0.00	0.00	0.00	0.
25	0.00	0.00	0.00	0.00	0.00	0.00	*****	0.00	0.00	0.00	*****	0.
26	0.00	0.00	0.01	0.01	0.01	0.01	*****	0.04	0.05	0.01	0.01	0.
27	0.00	0.00	0.00	0.00	0.00	0.00	*****	0.00	0.00	0.00	0.00	0.
28	0.00	0.00	0.00	0.00	0.01	0.02	*****	0.02	0.01	0.01	0.01	0.
29	0.00	0.00	0.00	0.00	0.00	0.00	*****	0.00	0.01	0.02	0.02	0.
30	0.00	0.00	0.00	0.00	0.00	0.00	*****	0.00	0.00	0.00	0.00	0.

DAY	13	14	15	16	17	18	19	20	21	22	23	2
1	0.01	0.01	0.01	0.01	0.02	0.02	0.02	0.01	0.01	0.01	0.01	0.
2	0.02	0.02	0.01	0.01	0.01	0.01	0.01	0.01	0.02	0.03	0.04	0.
3	0.01	0.01	0.02	0.02	0.02	0.01	0.01	0.01	0.02	0.03	0.02	0.
4	0.01	0.01	0.01	0.01	0.01	0.01	0.01	0.01	0.01	0.01	0.02	0.
5	0.02	0.01	0.01	0.01	0.01	0.01	0.02	0.02	0.01	0.01	0.01	0.
6	0.01	0.01	0.02	0.02	0.02	0.02	0.02	0.02	0.03	0.02	0.02	0.
7	0.00	0.00	0.01	0.01	0.01	0.01	0.01	0.01	0.01	0.01	0.01	0.
8	0.01	0.00	0.01	0.01	0.01	0.01	0.01	0.01	0.01	0.01	0.01	0.
9	0.00	0.00	0.01	0.01	0.01	0.01	0.01	0.00	0.00	0.00	0.00	0.
10	0.01	0.01	0.01	0.02	0.01	0.01	0.01	0.01	0.01	0.01	0.01	0.
11	0.01	0.01	0.01	0.01	0.01	0.01	0.01	0.02	0.02	0.01	0.01	0.
12	0.02	0.01	0.01	0.01	0.01	0.01	0.01	0.01	0.01	0.01	0.01	0.
13	0.02	0.02	0.02	0.02	0.02	0.02	0.02	0.02	0.01	0.01	0.01	0.
14	0.02	0.00	0.01	0.01	0.01	0.01	0.02	0.02	0.02	0.01	0.01	0.
15	0.01	0.01	0.01	0.01	0.01	0.01	0.01	0.01	0.01	0.01	0.01	0.
16	0.01	0.02	0.02	0.02	0.02	0.02	0.01	0.01	0.01	0.01	0.00	0.
17	0.03	0.03	0.02	0.02	0.02	0.02	0.02	0.02	0.01	0.02	0.02	0.
18	0.02	0.02	0.03	0.03	0.02	0.02	0.01	0.02	0.02	0.03	0.03	0.
19	0.02	0.02	0.02	0.02	0.02	0.02	0.02	0.02	0.02	0.02	0.02	0.
20	0.02	0.02	0.02	0.02	0.02	0.02	0.02	0.02	0.02	0.02	0.02	0.
21	0.01	0.01	*****	*****	*****	*****	*****	*****	*****	*****	*****	***
22	*****	0.01	0.01	0.01	0.01	0.01	0.01	0.01	0.01	0.01	0.01	0.
23	0.00	0.00	0.00	0.00	0.00	0.00	0.00	0.00	0.00	0.00	0.00	0.
24	0.00	0.00	0.00	0.00	0.00	0.00	0.00	0.00	0.00	0.00	0.00	0.
25	0.00	0.00	*****	0.00	0.00	0.00	0.00	0.00	0.00	0.00	0.01	0.
26	0.00	0.00	0.00	0.00	0.00	0.00	0.00	0.00	0.00	0.00	0.00	0.
27	0.00	0.00	0.00	0.00	0.00	0.00	0.00	0.00	0.00	0.00	0.00	0.
28	0.01	0.00	0.00	0.00	0.00	0.00	0.00	0.00	0.00	0.00	0.00	0.
29	0.00	0.00	0.00	0.00	0.00	0.00	0.00	0.00	0.00	0.00	0.00	0.
30	0.00	0.00	0.00	0.00	0.00	0.00	0.00	0.00	0.00	0.00	0.00	0.

OXIDES OF NITROGEN - NO S050

FREQUENCY DISTRIBUTION TABLES

MONTH JUNE 84

PERCENT OF READINGS WITH WIND DIRECTION

WIND DIRECTION	POLLUTANT OCC. HOURS	FREQUENCY OF OCCURRENCE %
N	44	17.2
NE	26	10.2
E	34	13.3
SE	25	9.8
S	18	7.0
SW	26	10.2
W	48	18.8
NW	35	13.7
CALM	0	0.0
INOP	0	0.0

FREQUENCY OF READINGS WITH WIND DIRECTION

WIND DIRECTION	HOURS OF WIND OCCURRENCE	HOURS OF READINGS	FREQUENCY OF READINGS WITH WIND
N	78	44	56.4
NE	65	26	40.0
E	89	34	38.2
SE	63	25	39.7
S	56	18	32.1
SW	74	26	35.1
W	159	48	30.2
NW	101	35	34.7
CALM	4	0	0.0
INOP	0	0	0.0

NOTE.1. READINGS CONSIDERED IN FREQUENCY DISTRIBUTION TABLES ARE THOSE GREATER THAN 0.0100 PPM

2. VALUE OF ****** INDICATES NO DATA AVAILABLE OR INSUFFICIENT DATA

3. WIND DATA UTILIZED FOR CORRELATION PURPOSES WAS MONITORED AT ST ALBERT S050

OXIDES OF NITROGEN - NO2 S050

PPM ONE HOUR AVERAGE

MONTH JUNE 84

DAY	0001-0800 AVE.	NO.	0801-1600 AVE.	NO.	1601-2400 AVE.	NO.	FULL DAY AVE.	NO.	DAILY PEAK
1	0.00	8	0.00	8	0.00	8	0.00	24	0.01
2	0.00	8	0.01	8	0.01	8	0.00	24	0.02
3	0.01	8	0.01	8	0.01	8	0.01	24	0.02
4	0.01	8	0.01	8	0.00	8	0.01	24	0.02
5	0.01	8	0.01	8	0.01	8	0.01	24	0.02
6	0.00	8	0.01	8	0.01	8	0.01	24	0.02
7	0.00	8	0.01	8	0.01	8	0.01	24	0.02
8	0.00	8	0.00	8	0.00	8	0.00	24	0.01
9	0.00	8	0.00	8	0.00	8	0.00	24	0.01
10	0.00	8	0.00	8	0.00	8	0.00	24	0.00
11	0.00	8	0.00	8	0.00	8	0.00	24	0.01
12	0.00	8	0.00	8	0.00	8	0.00	24	0.01
13	0.00	8	0.00	8	0.00	8	0.00	24	0.00
14	0.00	8	0.00	8	0.01	8	0.00	24	0.02
15	0.00	8	0.01	8	0.00	8	0.00	24	0.01
16	0.00	8	0.00	8	0.00	8	0.00	24	0.00
17	0.00	8	0.00	8	0.00	8	0.00	24	0.01
18	0.00	8	0.00	8	0.00	8	0.00	24	0.01
19	0.00	8	0.00	8	0.00	8	0.00	24	0.00
20	0.00	8	0.00	8	0.00	8	0.00	24	0.01
21	0.00	8	0.00	6	0.0	0	0.00	14	0.01
22	0.0	0	0.01	3	0.01	8	0.01	11	0.02
23	0.01	8	0.00	8	0.00	8	0.01	24	0.03
24	0.01	8	0.00	8	0.00	8	0.00	24	0.03
25	0.00	7	0.00	6	0.01	8	0.01	21	0.02
26	0.01	7	0.02	8	0.02	8	0.02	23	0.04
27	0.01	7	0.00	8	0.02	8	0.01	23	0.03
28	0.02	7	0.01	8	0.01	8	0.01	23	0.02
29	0.02	7	0.02	8	0.00	8	0.01	23	0.04
30	0.00	7	0.00	8	0.00	8	0.00	23	0.01

SUMMARY OF PEAK READINGS, PEAK AVERAGES, MONTHLY STATS

PEAK HOURLY READING 0.04 ON DAY 26 801 - 900 HOURS

WIND READINGS HOUR BEFORE/DURING /AFTER PEAK HOURLY READING

NW 14 / W 7 / S 7

PEAK CALENDAR DAY AVG. 0.02 ON DAY 26

ARITHMETIC MEAN 0.00 NO. RDGS. 689 HRS. (%OPER. 95.69%)

COMPARISON TO CLEAN AIR (MAXIMUM LEVELS) REGULATION

	REGULATIONS	NO.IN EXCESS OF REGULATION	% OF TIME PER MONTH THAT REG. WAS EXCEEDED
1-HOUR	0.21	0	0.0
24-HOUR	0.11	0	0.0

COMPARISON TO 24-HOUR REGULATION WAS ON A CALENDAR DAY BASIS ONLY

FREQUENCY DISTRIBUTION

RANGE	NO.OF RDGS.	PERCENT	CUMULATIVE
0.0 - 0.000	462	67.1	67.1
0.001 - 0.110	227	32.9	100.0
0.111 - 0.210	0	0.0	100.0
0.211 - 0.420	0	0.0	100.0
0.421 OR OVER	0	0.0	100.0

ALL MEANS ARE ARITHMETIC UNLESS OTHERWISE SPECIFIED

OXIDES OF NITROGEN - NO2 S050

PPM ONE HOUR AVERAGE

MONTH JUNE 84

DAY	1	2	3	4	5	6	7	8	9	10	11	12
1	0.00	0.00	0.00	0.00	0.00	0.01	0.00	0.00	0.00	0.00	0.00	0.00
2	0.00	0.00	0.00	0.00	0.00	0.00	0.00	0.00	0.00	0.00	0.01	0.01
3	0.01	0.02	0.01	0.02	0.02	0.02	0.01	0.00	0.01	0.01	0.00	0.01
4	0.01	0.01	0.01	0.01	0.01	0.01	0.01	0.01	0.02	0.01	0.01	0.01
5	0.01	0.00	0.01	0.00	0.00	0.01	0.01	0.02	0.01	0.01	0.02	0.01
6	0.00	0.01	0.00	0.01	0.00	0.00	0.00	0.01	0.02	0.01	0.02	0.01
7	0.00	0.00	0.00	0.00	0.01	0.01	0.00	0.01	0.01	0.01	0.00	0.00
8	0.00	0.00	0.00	0.00	0.00	0.01	0.00	0.00	0.00	0.00	0.01	0.00
9	0.00	0.00	0.01	0.00	0.00	0.01	0.00	0.00	0.00	0.00	0.00	0.00
10	0.00	0.00	0.00	0.00	0.00	0.00	0.00	0.00	0.00	0.00	0.00	0.00
11	0.01	0.00	0.00	0.00	0.00	0.01	0.01	0.00	0.00	0.00	0.00	0.00
12	0.00	0.00	0.00	0.00	0.00	0.00	0.01	0.00	0.00	0.00	0.00	0.00
13	0.00	0.00	0.00	0.00	0.00	0.00	0.00	0.00	0.00	0.00	0.00	0.00
14	0.00	0.00	0.01	0.00	0.00	0.01	0.01	0.00	0.00	0.01	0.01	0.00
15	0.00	0.00	0.00	0.00	0.00	0.00	0.00	0.00	0.00	0.00	0.00	0.01
16	0.00	0.00	0.00	0.00	0.00	0.00	0.00	0.00	0.00	0.00	0.00	0.00
17	0.00	0.00	0.01	0.00	0.00	0.00	0.00	0.00	0.00	0.00	0.00	0.00
18	0.00	0.00	0.00	0.00	0.00	0.00	0.00	0.00	0.00	0.00	0.00	0.00
19	0.00	0.00	0.00	0.00	0.00	0.00	0.00	0.00	0.00	0.00	0.00	0.00
20	0.01	0.00	0.00	0.00	0.00	0.00	0.00	0.00	0.00	0.00	0.00	0.00
21	0.01	0.00	0.00	0.00	0.00	0.00	0.00	0.01	0.01	0.00	0.00	0.00
22	*****	*****	*****	*****	*****	*****	*****	*****	*****	*****	*****	*****
23	0.02	0.03	0.02	0.02	0.00	0.00	0.00	0.00	0.00	0.00	0.00	0.00
24	0.03	0.03	0.01	0.00	0.00	0.00	0.00	0.00	0.00	0.00	0.00	0.00
25	0.00	0.00	0.00	0.00	0.00	0.00	*****	0.01	0.01	0.00	*****	0.00
26	0.01	0.01	0.01	0.02	0.01	0.01	*****	0.01	0.04	0.03	0.02	0.02
27	0.02	0.02	0.01	0.00	0.00	0.00	*****	0.00	0.00	0.00	0.00	0.00
28	0.01	0.01	0.02	0.02	0.02	0.02	*****	0.02	0.02	0.01	0.01	0.00
29	0.02	0.02	0.02	0.02	0.01	0.01	*****	0.02	0.02	0.01	0.04	0.00
30	0.00	0.00	0.00	0.00	0.00	0.00	*****	0.00	0.00	0.00	0.00	0.00

DAY	13	14	15	16	17	18	19	20	21	22	23	24
1	0.00	0.00	0.00	0.00	0.00	0.00	0.00	0.01	0.00	0.00	0.00	0.00
2	0.00	0.00	0.01	0.01	0.00	0.00	0.00	0.00	0.01	0.02	0.01	0.00
3	0.01	0.01	0.01	0.01	0.00	0.01	0.01	0.01	0.02	0.01	0.02	0.00
4	0.00	0.00	0.00	0.00	0.00	0.00	0.00	0.01	0.01	0.01	0.00	0.00
5	0.00	0.01	0.01	0.02	0.01	0.01	0.00	0.00	0.01	0.01	0.01	0.00
6	0.00	0.00	0.00	0.01	0.02	0.01	0.01	0.01	0.01	0.00	0.00	0.00
7	0.01	0.01	0.01	0.01	0.01	0.02	0.01	0.01	0.00	0.00	0.00	0.00
8	0.00	0.00	0.00	0.00	0.00	0.00	0.00	0.00	0.00	0.00	0.00	0.00
9	0.00	0.00	0.00	0.00	0.01	0.01	0.00	0.00	0.00	0.00	0.00	0.00
10	0.00	0.00	0.00	0.00	0.00	0.00	0.00	0.00	0.00	0.00	0.00	0.00
11	0.00	0.00	0.00	0.00	0.00	0.00	0.00	0.00	0.00	0.00	0.00	0.00
12	0.00	0.01	0.00	0.00	0.00	0.00	0.00	0.00	0.00	0.00	0.00	0.00
13	0.00	0.00	0.00	0.00	0.00	0.00	0.00	0.00	0.00	0.00	0.00	0.00
14	0.00	0.02	0.00	0.00	0.00	0.01	0.00	0.00	0.00	0.01	0.01	0.00
15	0.01	0.01	0.01	0.00	0.00	0.00	0.00	0.00	0.00	0.00	0.00	0.00
16	0.00	0.00	0.00	0.00	0.00	0.00	0.00	0.00	0.00	0.00	0.00	0.00
17	0.00	0.00	0.00	0.00	0.00	0.00	0.00	0.00	0.00	0.00	0.00	0.00
18	0.00	0.00	0.00	0.00	0.00	0.01	0.00	0.00	0.01	0.00	0.00	0.00
19	0.00	0.00	0.00	0.00	0.00	0.00	0.00	0.00	0.00	0.00	0.00	0.00
20	0.00	0.00	0.00	0.00	0.00	0.00	0.00	0.00	0.00	0.00	0.00	0.00
21	0.00	0.00	*****	*****	*****	*****	*****	*****	*****	*****	*****	*****
22	*****	0.01	0.01	0.01	0.01	0.01	0.01	0.02	0.02	0.01	0.01	0.00
23	0.00	0.00	0.00	0.00	0.00	0.00	0.00	0.00	0.00	0.01	0.01	0.00
24	0.00	0.00	0.00	0.00	0.00	0.00	0.00	0.01	0.01	0.01	0.01	0.00
25	0.00	0.00	*****	0.01	0.01	0.01	0.01	0.01	0.01	0.02	0.02	0.00
26	0.01	0.01	0.01	0.01	0.01	0.01	0.02	0.02	0.02	0.03	0.03	0.00
27	0.00	0.00	0.00	0.00	0.01	0.01	0.02	0.02	0.02	0.02	0.02	0.00
28	0.02	0.01	0.00	0.00	0.00	0.00	0.01	0.01	0.01	0.02	0.02	0.00
29	0.01	0.01	0.01	0.01	0.00	0.00	0.00	0.00	0.00	0.00	0.00	0.00
30	0.00	0.00	0.00	0.00	0.00	0.00	0.00	0.00	0.00	0.00	0.00	0.00

OXIDES OF NITROGEN - NO2 S050

FREQUENCY DISTRIBUTION TABLES

MONTH JUNE 84

PERCENT OF READINGS WITH WIND DIRECTION

WIND DIRECTION	POLLUTANT OCC. HOURS	FREQUENCY OF OCCURRENCE %
N	21	11.6
NE	29	16.0
E	30	16.6
SE	24	13.3
S	17	9.4
SW	8	4.4
W	30	16.6
NW	18	9.9
CALM	4	2.2
INOP	0	0.0

FREQUENCY OF READINGS WITH WIND DIRECTION

WIND DIRECTION	HOURS OF WIND OCCURRENCE	HOURS OF READINGS	FREQUENCY OF READINGS WITH WIND
N	78	21	26.9
NE	65	29	44.6
E	89	30	33.7
SE	63	24	38.1
S	56	17	30.4
SW	74	8	10.8
W	159	30	18.9
NW	101	18	17.8
CALM	4	4	100.0
INOP	0	0	0.0

NOTE.1. READINGS CONSIDERED IN FREQUENCY DISTRIBUTION TABLES ARE THOSE GREATER THAN 0.0100 PPM

2. VALUE OF ****** INDICATES NO DATA AVAILABLE OR INSUFFICIENT DATA

3. WIND DATA UTILIZED FOR CORRELATION PURPOSES WAS MONITORED AT ST ALBERT S050

SULFUR DIOXIDE S050

PPM ONE HOUR AVERAGE

MONTH JUNE 84

DAY	0001-0800 AVE.	NO.	0801-1600 AVE.	NO.	1601-2400 AVE.	NO.	FULL DAY AVE	NO.	DAILY PEAK
1	0.00	8	0.00	8	0.00	8	0.00	24	0.00
2	0.00	8	0.00	8	0.00	8	0.00	24	0.00
3	0.00	8	0.00	8	0.00	8	0.00	24	0.00
4	0.00	8	0.00	8	0.00	8	0.00	24	0.00
5	0.00	8	0.00	8	0.00	8	0.00	24	0.00
6	0.00	8	0.00	8	0.00	8	0.00	24	0.00
7	0.00	8	0.00	8	0.00	8	0.00	24	0.00
8	0.00	8	0.00	8	0.00	8	0.00	24	0.01
9	0.00	8	0.00	8	0.00	8	0.00	24	0.01
10	0.00	8	0.00	8	0.00	8	0.00	24	0.00
11	0.00	8	0.00	8	0.00	8	0.00	24	0.00
12	0.00	8	0.00	8	0.00	8	0.00	24	0.00
13	0.00	8	0.00	8	0.00	8	0.00	24	0.00
14	0.00	8	0.00	8	0.00	8	0.00	24	0.00
15	0.00	8	0.00	8	0.00	8	0.00	24	0.00
16	0.00	8	0.00	8	0.00	8	0.00	24	0.00
17	0.00	8	0.00	8	0.00	8	0.00	24	0.00
18	0.00	8	0.00	8	0.00	8	0.00	24	0.00
19	0.00	8	0.00	6	0.00	8	0.00	22	0.00
20	0.00	8	0.00	6	0.00	8	0.00	22	0.00
21	0.00	7	0.00	8	0.00	8	0.00	23	0.00
22	0.00	7	0.00	8	0.00	8	0.00	23	0.00
23	0.00	7	0.00	8	0.00	8	0.00	23	0.00
24	0.00	7	0.00	8	0.00	8	0.00	23	0.00
25	0.00	7	0.00	8	0.00	8	0.00	23	0.00
26	0.01	7	0.00	8	0.00	8	0.00	23	0.02
27	0.00	7	0.00	8	0.00	8	0.00	23	0.00
28	0.00	7	0.00	8	0.00	8	0.00	23	0.02
29	0.00	7	0.00	8	0.00	8	0.00	23	0.00
30	0.00	7	0.00	8	0.00	8	0.00	23	0.01

SUMMARY OF PEAK READINGS, PEAK AVERAGES, MONTHLY STATS

PEAK HOURLY READING 0.02 ON DAY 26 301 - 400 HOURS

WIND READINGS HOUR BEFORE/DURING /AFTER PEAK HOURLY READING

NW 14 / NW 10 / NW 7

PEAK CALENDAR DAY AVG. 0.00 ON DAY 26

ARITHMETIC MEAN 0.00 NO. RDGS. 706 HRS. (%OPER. 98.06%)

COMPARISON TO CLEAN AIR (MAXIMUM LEVELS) REGULATION

	REGULATIONS	NO.IN EXCESS OF REGULATION	% OF TIME PER MONTH THAT REG. WAS EXCEEDED
1-HOUR	0.17	0	0.0
24-HOUR	0.06	0	0.0

COMPARISON TO 24-HOUR REGULATION WAS ON A CALENDAR DAY BASIS ONLY

FREQUENCY DISTRIBUTION

RANGE	NO.OF RDGS.	PERCENT	CUMULATIVE
0.0 - 0.000	690	97.7	97.7
0.001 - 0.060	16	2.3	100.0
0.061 - 0.170	0	0.0	100.0
0.171 - 0.340	0	0.0	100.0
0.341 OR OVER	0	0.0	100.0

ALL MEANS ARE ARITHMETIC UNLESS OTHERWISE SPECIFIED

SULFUR DIOXIDE S050

PPM ONE HOUR AVERAGE

MONTH JUNE 84

DAY	1	2	3	4	5	6	7	8	9	10	11	12
1	0.00	0.00	0.00	0.00	0.00	0.00	0.00	0.00	0.00	0.00	0.00	0.0
2	0.00	0.00	0.00	0.00	0.00	0.00	0.00	0.00	0.00	0.00	0.00	0.
3	0.00	0.00	0.00	0.00	0.00	0.00	0.00	0.00	0.00	0.00	0.00	0.
4	0.00	0.00	0.00	0.00	0.00	0.00	0.00	0.00	0.00	0.00	0.00	0.0
5	0.00	0.00	0.00	0.00	0.00	0.00	0.00	0.00	0.00	0.00	0.00	0.0
6	0.00	0.00	0.00	0.00	0.00	0.00	0.00	0.00	0.00	0.00	0.00	0.
7	0.00	0.00	0.00	0.00	0.00	0.00	0.00	0.00	0.00	0.00	0.00	0.
8	0.00	0.00	0.00	0.00	0.00	0.00	0.00	0.00	0.00	0.00	0.00	0.0
9	0.00	0.00	0.00	0.00	0.00	0.00	0.00	0.00	0.00	0.00	0.00	0.0
10	0.00	0.00	0.00	0.00	0.00	0.00	0.00	0.00	0.00	0.00	0.00	0.
11	0.00	0.00	0.00	0.00	0.00	0.00	0.00	0.00	0.00	0.00	0.00	0.
12	0.00	0.00	0.00	0.00	0.00	0.00	0.00	0.00	0.00	0.00	0.00	0.0
13	0.00	0.00	0.00	0.00	0.00	0.00	0.00	0.00	0.00	0.00	0.00	0.0
14	0.00	0.00	0.00	0.00	0.00	0.00	0.00	0.00	0.00	0.00	0.00	0.0
15	0.00	0.00	0.00	0.00	0.00	0.00	0.00	0.00	0.00	0.00	0.00	0.
16	0.00	0.00	0.00	0.00	0.00	0.00	0.00	0.00	0.00	0.00	0.00	0.
17	0.00	0.00	0.00	0.00	0.00	0.00	0.00	0.00	0.00	0.00	0.00	0.0
18	0.00	0.00	0.00	0.00	0.00	0.00	0.00	0.00	0.00	0.00	0.00	0.0
19	0.00	0.00	0.00	0.00	0.00	0.00	0.00	0.00	0.00	0.00	0.00	0.
20	0.00	0.00	0.00	0.00	0.00	0.00	0.00	0.00	0.00	0.00	*****	0.
21	0.00	0.00	0.00	0.00	0.00	0.00	*****	0.00	0.00	0.00	0.00	0.
22	0.00	0.00	0.00	0.00	0.00	0.00	*****	0.00	0.00	0.00	0.00	0.0
23	0.00	0.00	0.00	0.00	0.00	0.00	*****	0.00	0.00	0.00	0.00	0.0
24	0.00	0.00	0.00	0.00	0.00	0.00	*****	0.00	0.00	0.00	0.00	0.
25	0.00	0.00	0.00	0.00	0.00	0.00	*****	0.00	0.00	0.00	0.00	0.
26	0.01	0.01	0.01	0.02	0.02	0.02	*****	0.00	0.00	0.00	0.00	0.0
27	0.00	0.00	0.00	0.00	0.00	0.00	*****	0.00	0.00	0.00	0.00	0.0
28	0.00	0.00	0.00	0.00	0.00	0.01	*****	0.02	0.02	0.00	0.00	0.
29	0.00	0.00	0.00	0.00	0.00	0.00	*****	0.00	0.00	0.00	0.00	0.
30	0.00	0.00	0.00	0.00	0.00	0.00	*****	0.00	0.00	0.00	0.00	0.0

DAY	13	14	15	16	17	18	19	20	21	22	23	2
1	0.00	0.00	0.00	0.00	0.00	0.00	0.00	0.00	0.00	0.00	0.00	0.0
2	0.00	0.00	0.00	0.00	0.00	0.00	0.00	0.00	0.00	0.00	0.00	0.
3	0.00	0.00	0.00	0.00	0.00	0.00	0.00	0.00	0.00	0.00	0.00	0.
4	0.00	0.00	0.00	0.00	0.00	0.00	0.00	0.00	0.00	0.00	0.00	0.
5	0.00	0.00	0.00	0.00	0.00	0.00	0.00	0.00	0.00	0.00	0.00	0.0
6	0.00	0.00	0.00	0.00	0.00	0.00	0.00	0.00	0.00	0.00	0.00	0.0
7	0.00	0.00	0.00	0.00	0.00	0.00	0.00	0.00	0.00	0.00	0.00	0.
8	0.00	0.00	0.00	0.00	0.01	0.00	0.00	0.00	0.00	0.00	0.00	0.
9	0.00	0.00	0.00	0.00	0.00	0.01	0.00	0.00	0.00	0.00	0.00	0.
10	0.00	0.00	0.00	0.00	0.00	0.00	0.00	0.00	0.00	0.00	0.00	0.0
11	0.00	0.00	0.00	0.00	0.00	0.00	0.00	0.00	0.00	0.00	0.00	0.
12	0.00	0.00	0.00	0.00	0.00	0.00	0.00	0.00	0.00	0.00	0.00	0.
13	0.00	0.00	0.00	0.00	0.00	0.00	0.00	0.00	0.00	0.00	0.00	0.
14	0.00	0.00	0.00	0.00	0.00	0.00	0.00	0.00	0.00	0.00	0.00	0.0
15	0.00	0.00	0.00	0.00	0.00	0.00	0.00	0.00	0.00	0.00	0.00	0.0
16	0.00	0.00	0.00	0.00	0.00	0.00	0.00	0.00	0.00	0.00	0.00	0.
17	0.00	0.00	0.00	0.00	0.00	0.00	0.00	0.00	0.00	0.00	0.00	0.
18	0.00	0.00	0.00	0.00	0.00	0.00	0.00	0.00	0.00	0.00	0.00	0.0
19	0.00	0.00	*****	*****	0.00	0.00	0.00	0.00	0.00	0.00	0.00	0.0
20	0.00	0.00	*****	0.00	0.00	0.00	0.00	0.00	0.00	0.00	0.00	0.
21	0.00	0.00	0.00	0.00	0.00	0.00	0.00	0.00	0.00	0.00	0.00	0.
22	0.00	0.00	0.00	0.00	0.00	0.00	0.00	0.00	0.00	0.00	0.00	0.
23	0.00	0.00	0.00	0.00	0.00	0.00	0.00	0.00	0.00	0.00	0.00	0.0
24	0.00	0.00	0.00	0.00	0.00	0.00	0.00	0.00	0.00	0.00	0.00	0.
25	0.00	0.00	0.00	0.00	0.00	0.00	0.00	0.00	0.00	0.00	0.00	0.
26	0.00	0.00	0.00	0.00	0.00	0.00	0.00	0.00	0.00	0.00	0.00	0.
27	0.00	0.00	0.00	0.00	0.00	0.00	0.00	0.00	0.00	0.00	0.00	0.0
28	0.00	0.00	0.00	0.00	0.00	0.00	0.00	0.00	0.00	0.00	0.00	0.0
29	0.00	0.00	0.00	0.00	0.00	0.00	0.00	0.00	0.00	0.00	0.00	0.
30	0.00	0.00	0.00	0.00	0.00	0.00	0.00	0.00	0.00	0.00	0.01	0.

SULFUR DIOXIDE S050

FREQUENCY DISTRIBUTION TABLES

MONTH JUNE 84

PERCENT OF READINGS WITH WIND DIRECTION

WIND DIRECTION	POLLUTANT OCC. HOURS	FREQUENCY OF OCCURRENCE %
N	0	0.0
NE	1	6.3
E	0	0.0
SE	0	0.0
S	3	18.8
SW	2	12.5
W	5	31.3
NW	5	31.3
CALM	0	0.0
INOP	0	0.0

FREQUENCY OF READINGS WITH WIND DIRECTION

WIND DIRECTION	HOURS OF WIND OCCURRENCE	HOURS OF READINGS	FREQUENCY OF READINGS WITH WIND
N	81	0	0.0
NE	69	1	1.4
E	89	0	0.0
SE	63	0	0.0
S	56	3	5.4
SW	75	2	2.7
W	163	5	3.1
NW	106	5	4.7
CALM	4	0	0.0
INOP	0	0	0.0

NOTE.1. READINGS CONSIDERED IN FREQUENCY DISTRIBUTION TABLES ARE THOSE GREATER THAN 0.0001 PPM

2. VALUE OF ****** INDICATES NO DATA AVAILABLE OR INSUFFICIENT DATA

3. WIND DATA UTILIZED FOR CORRELATION PURPOSES WAS MONITORED AT ST ALBERT S050

HYDROGEN SULFIDE (H2S) S050

PPB ONE HOUR AVERAGE

MONTH JUNE 84

DAY	0001-0800 AVE.	NO.	0801-1600 AVE.	NO.	1601-2400 AVE.	NO.	FULL DAY AVE.	NO.	DAILY PEAK
1	0.00	8	0.00	8	0.00	8	0.00	24	0.0
2	0.00	8	0.00	8	0.00	8	0.00	24	0.0
3	0.50	8	0.00	8	0.00	8	0.17	24	1.0
4	0.00	8	0.00	8	0.00	8	0.00	24	0.0
5	0.00	8	0.00	8	0.00	8	0.00	24	0.0
6	0.00	8	0.00	8	0.00	8	0.00	24	0.0
7	0.00	8	0.00	8	0.00	8	0.00	24	0.0
8	0.00	8	0.00	8	0.00	8	0.00	24	0.0
9	0.00	8	0.00	3	0.0	0	0.00	11	0.0
10	0.0	0	0.0	0	0.0	0	0.0	0	0.0
11	0.0	0	0.00	5	0.00	8	0.00	13	0.0
12	0.00	8	0.00	8	0.00	8	0.00	24	0.0
13	0.00	8	0.00	8	0.00	8	0.00	24	0.0
14	0.00	8	0.00	8	0.00	8	0.00	24	0.0
15	0.19	8	0.00	8	0.00	8	0.06	24	1.5
16	1.00	8	0.00	8	0.00	8	0.33	24	2.0
17	0.00	8	0.00	8	0.00	8	0.00	24	0.0
18	0.00	8	0.00	2	0.0	0	0.00	10	0.0
19	0.0	0	0.0	0	0.00	3	0.00	3	0.0
20	0.00	5	0.0	0	0.0	0	0.00	5	0.0
21	0.0	0	0.0	0	0.00	3	0.00	3	0.0
22	0.00	7	0.00	8	0.00	7	0.00	22	0.0
23	0.00	7	0.00	8	0.00	8	0.00	23	0.0
24	0.00	7	0.00	8	0.00	8	0.00	23	0.0
25	0.00	7	0.00	8	0.00	8	0.00	23	0.0
26	0.00	7	0.00	8	0.00	8	0.00	23	0.0
27	0.00	7	0.00	8	0.00	8	0.00	23	0.0
28	0.00	7	0.00	8	0.00	8	0.00	23	0.0
29	0.00	7	0.00	8	0.00	8	0.00	23	0.0
30	0.00	7	0.00	8	0.00	8	0.00	23	0.0

SUMMARY OF PEAK READINGS, PEAK AVERAGES, MONTHLY STATS

PEAK HOURLY READING 2.0 ON DAY 16 401 - 500 HOURS

WIND READINGS HOUR BEFORE/DURING /AFTER PEAK HOURLY READING

W 7 / W 3 / W 7

PEAK CALENDAR DAY AVG. 0.33 ON DAY 16

ARITHMETIC MEAN 0.02 NO. RDGS. 587 HRS. (%OPER. 81.53%)

COMPARISON TO CLEAN AIR (MAXIMUM LEVELS) REGULATION

	REGULATIONS	NO.IN EXCESS OF REGULATION	% OF TIME PER MONTH THAT REG. WAS EXCEEDED
1-HOUR	10.00	0	0.0
24-HOUR	3.00	0	0.0

COMPARISON TO 24-HOUR REGULATION WAS ON A CALENDAR DAY BASIS ONLY

FREQUENCY DISTRIBUTION

RANGE	NO.OF RDGS.	PERCENT	CUMULATIVE
0.0 - 0.000	576	98.1	98.1
0.001 - 1.500	9	1.5	99.7
1.501 - 3.999	2	0.3	100.0
4.000 - 7.999	0	0.0	100.0
8.000 OR OVER	0	0.0	100.0

ALL MEANS ARE ARITHMETIC UNLESS OTHERWISE SPECIFIED

HYDROGEN SULFIDE (H2S) S050

PPB ONE HOUR AVERAGE

MONTH JUNE 84

DAY	1	2	3	4	5	6	7	8	9	10	11	12
1	0.0	0.0	0.0	0.0	0.0	0.0	0.0	0.0	0.0	0.0	0.0	0.0
2	0.0	0.0	0.0	0.0	0.0	0.0	0.0	0.0	0.0	0.0	0.0	0.0
3	0.0	1.0	0.0	1.0	1.0	1.0	0.0	0.0	0.0	0.0	0.0	0.0
4	0.0	0.0	0.0	0.0	0.0	0.0	0.0	0.0	0.0	0.0	0.0	0.0
5	0.0	0.0	0.0	0.0	0.0	0.0	0.0	0.0	0.0	0.0	0.0	0.0
6	0.0	0.0	0.0	0.0	0.0	0.0	0.0	0.0	0.0	0.0	0.0	0.0
7	0.0	0.0	0.0	0.0	0.0	0.0	0.0	0.0	0.0	0.0	0.0	0.0
8	0.0	0.0	0.0	0.0	0.0	0.0	0.0	0.0	0.0	0.0	0.0	0.0
9	0.0	0.0	0.0	0.0	0.0	0.0	0.0	0.0	0.0	0.0	0.0	*****
10	*****	*****	*****	*****	*****	*****	*****	*****	*****	*****	*****	*****
11	*****	*****	*****	*****	*****	*****	*****	*****	*****	*****	*****	0.0
12	0.0	0.0	0.0	0.0	0.0	0.0	0.0	0.0	0.0	0.0	0.0	0.0
13	0.0	0.0	0.0	0.0	0.0	0.0	0.0	0.0	0.0	0.0	0.0	0.0
14	0.0	0.0	0.0	0.0	0.0	0.0	0.0	0.0	0.0	0.0	0.0	0.0
15	0.0	0.0	0.0	0.0	1.5	0.0	0.0	0.0	0.0	0.0	0.0	0.0
16	0.0	1.0	1.0	1.0	2.0	2.0	1.0	0.0	0.0	0.0	0.0	0.0
17	0.0	0.0	0.0	0.0	0.0	0.0	0.0	0.0	0.0	0.0	0.0	0.0
18	0.0	0.0	0.0	0.0	0.0	0.0	0.0	0.0	0.0	0.0	*****	*****
19	*****	*****	*****	*****	*****	*****	*****	*****	*****	*****	*****	*****
20	0.0	0.0	0.0	0.0	0.0	*****	*****	*****	*****	*****	*****	*****
21	*****	*****	*****	*****	*****	*****	*****	*****	*****	*****	*****	*****
22	0.0	0.0	0.0	0.0	0.0	0.0	*****	0.0	0.0	0.0	0.0	0.0
23	0.0	0.0	0.0	0.0	0.0	0.0	*****	0.0	0.0	0.0	0.0	0.0
24	0.0	0.0	0.0	0.0	0.0	0.0	*****	0.0	0.0	0.0	0.0	0.0
25	0.0	0.0	0.0	0.0	0.0	0.0	*****	0.0	0.0	0.0	0.0	0.0
26	0.0	0.0	0.0	0.0	0.0	0.0	*****	0.0	0.0	0.0	0.0	0.0
27	0.0	0.0	0.0	0.0	0.0	0.0	*****	0.0	0.0	0.0	0.0	0.0
28	0.0	0.0	0.0	0.0	0.0	0.0	*****	0.0	0.0	0.0	0.0	0.0
29	0.0	0.0	0.0	0.0	0.0	0.0	*****	0.0	0.0	0.0	0.0	0.0
30	0.0	0.0	0.0	0.0	0.0	0.0	*****	0.0	0.0	0.0	0.0	0.0

DAY	13	14	15	16	17	18	19	20	21	22	23	24
1	0.0	0.0	0.0	0.0	0.0	0.0	0.0	0.0	0.0	0.0	0.0	0.0
2	0.0	0.0	0.0	0.0	0.0	0.0	0.0	0.0	0.0	0.0	0.0	0.0
3	0.0	0.0	0.0	0.0	0.0	0.0	0.0	0.0	0.0	0.0	0.0	0.0
4	0.0	0.0	0.0	0.0	0.0	0.0	0.0	0.0	0.0	0.0	0.0	0.0
5	0.0	0.0	0.0	0.0	0.0	0.0	0.0	0.0	0.0	0.0	0.0	0.0
6	0.0	0.0	0.0	0.0	0.0	0.0	0.0	0.0	0.0	0.0	0.0	0.0
7	0.0	0.0	0.0	0.0	0.0	0.0	0.0	0.0	0.0	0.0	0.0	0.0
8	0.0	0.0	0.0	0.0	0.0	0.0	0.0	0.0	0.0	0.0	0.0	0.0
9	*****	*****	*****	*****	*****	*****	*****	*****	*****	*****	*****	*****
10	*****	*****	*****	*****	*****	*****	*****	*****	*****	*****	*****	*****
11	0.0	0.0	0.0	0.0	0.0	0.0	0.0	0.0	0.0	0.0	0.0	0.0
12	0.0	0.0	0.0	0.0	0.0	0.0	0.0	0.0	0.0	0.0	0.0	0.0
13	0.0	0.0	0.0	0.0	0.0	0.0	0.0	0.0	0.0	0.0	0.0	0.0
14	0.0	0.0	0.0	0.0	0.0	0.0	0.0	0.0	0.0	0.0	0.0	0.0
15	0.0	0.0	0.0	0.0	0.0	0.0	0.0	0.0	0.0	0.0	0.0	0.0
16	0.0	0.0	0.0	0.0	0.0	0.0	0.0	0.0	0.0	0.0	0.0	0.0
17	0.0	0.0	0.0	0.0	0.0	0.0	0.0	0.0	0.0	0.0	0.0	0.0
18	*****	*****	*****	*****	*****	*****	*****	*****	*****	*****	*****	*****
19	*****	*****	*****	*****	*****	*****	*****	*****	*****	0.0	0.0	0.0
20	*****	*****	*****	*****	*****	*****	*****	*****	*****	*****	*****	*****
21	*****	*****	*****	*****	*****	*****	*****	*****	*****	0.0	0.0	0.0
22	0.0	0.0	0.0	0.0	0.0	0.0	0.0	*****	0.0	0.0	0.0	0.0
23	0.0	0.0	0.0	0.0	0.0	0.0	0.0	0.0	0.0	0.0	0.0	0.0
24	0.0	0.0	0.0	0.0	0.0	0.0	0.0	0.0	0.0	0.0	0.0	0.0
25	0.0	0.0	0.0	0.0	0.0	0.0	0.0	0.0	0.0	0.0	0.0	0.0
26	0.0	0.0	0.0	0.0	0.0	0.0	0.0	0.0	0.0	0.0	0.0	0.0
27	0.0	0.0	0.0	0.0	0.0	0.0	0.0	0.0	0.0	0.0	0.0	0.0
28	0.0	0.0	0.0	0.0	0.0	0.0	0.0	0.0	0.0	0.0	0.0	0.0
29	0.0	0.0	0.0	0.0	0.0	0.0	0.0	0.0	0.0	0.0	0.0	0.0
30	0.0	0.0	0.0	0.0	0.0	0.0	0.0	0.0	0.0	0.0	0.0	0.0

HYDROGEN SULFIDE (H2S) S050

FREQUENCY DISTRIBUTION TABLES

MONTH JUNE 84

PERCENT OF READINGS WITH WIND DIRECTION

WIND DIRECTION	POLLUTANT OCC. HOURS	FREQUENCY OF OCCURRENCE %
N	1	9.1
NE	0	0.0
E	0	0.0
SE	0	0.0
S	0	0.0
SW	0	0.0
W	8	72.7
NW	2	18.2
CALM	0	0.0
INOP	0	0.0

FREQUENCY OF READINGS WITH WIND DIRECTION

WIND DIRECTION	HOURS OF WIND OCCURRENCE	HOURS OF READINGS	FREQUENCY OF READINGS WITH WIND
N	60	1	1.7
NE	62	0	0.0
E	82	0	0.0
SE	59	0	0.0
S	49	0	0.0
SW	39	0	0.0
W	128	8	6.3
NW	104	2	1.9
CALM	4	0	0.0
INOP	0	0	0.0

NOTE.1. READINGS CONSIDERED IN FREQUENCY DISTRIBUTION TABLES ARE THOSE GREATER THAN 0.0001 PPB

2. VALUE OF ****** INDICATES NO DATA AVAILABLE OR INSUFFICIENT DATA

3. WIND DATA UTILIZED FOR CORRELATION PURPOSES WAS MONITORED AT ST. ALBERT S050

ALBERTA ENVIRONMENT
DIVISION OF POLLUTION CONTROL
AIR QUALITY CONTROL BRANCH

WIND FREQUENCY TABLE

STATION: ST ALBERT S050

MONTH: JULY 1984

INSTRUMENT TYPE: ATHABASCA RES.

DIRECTION	DEGREES	TOTAL HOURS	PERCENT	AVERAGE SPEED IN KM/H
N	338 TO 22	45	6.05	7.6
NE	23 TO 67	75	10.08	7.4
E	68 TO 112	86	11.56	6.6
SE	113 TO 157	58	7.80	11.3
S	158 TO 202	69	9.27	8.7
SW	203 TO 247	55	7.39	5.1
W	248 TO 292	191	25.67	8.5
NW	293 TO 337	126	16.94	12.6
CALM	0 TO 000	39	5.24	

AVERAGE WIND SPEED 8.8 KM/H

WIND INSTRUMENT OPERATIONAL 744 HOURS (100.00%)

AMBIENT AIR MONITORING REPORT FOR THE MONTH OF JULY 1984

STATION: ST ALBER S050

POLLUTANT	MONITOR	RANGE MAX.	PEAK HOURLY	PEAK DAILY	MONTH MEAN	% OPER
NOX		PPM	0.09	0.03	0.01	95.3
NO		PPM	0.07	0.01	0.00	95.3
NO2		PPM	0.06	0.02	0.01	95.3
SO2		PPM	0.01	0.00	0.00	93.1
H2S		PPB	7.0	0.48	0.17	93.1

@ NOTE CARBON MONOXIDE CONTAINS PEAK 8-HR AVERAGE INSTEAD OF PEAK DAILY AVERAGE

S050 JULY 84

COMPARISON TO CLEAN AIR (MAXIMUM LEVELS) REGULATION

POLLUTANT	REGULATIONS		NO.IN EXCESS OF REGULATION	% OF TIME PER MONTH THAT REG. WAS EXCEEDED
NO2	1-HOUR	0.21 PPM	0	0.0
	24-HOUR	0.11 PPM	0	0.0
SO2	1-HOUR	0.17 PPM	0	0.0
	24-HOUR	0.06 PPM	0	0.0
H2S	1-HOUR	10.00 PPB	0	0.0
	24-HOUR	3.00 PPB	0	0.0

NOTE. COMPARISON TO 8-HOUR REGULATION WAS WITH TIME PERIODS 0001 - 0800 0801 - 1600 AND 1601 - 2400

NOTE. COMPARISON TO 24-HOUR REGULATION WAS ON A CALENDAR DAY BASIS ONLY

NOTE. OTHER POLLUTANTS NOT SPECIFIED IN THE CLEAN AIR (MAXIMUM LEVELS) REGULATIONS

HYDROGEN SULFIDE (H2S) S050

FREQUENCY DISTRIBUTION TABLES

MONTH JULY 84

PERCENT OF READINGS WITH WIND DIRECTION

WIND DIRECTION	POLLUTANT OCC. HOURS	FREQUENCY OF OCCURRENCE %
N	3	3.4
NE	8	9.0
E	13	14.6
SE	2	2.2
S	4	4.5
SW	11	12.4
W	37	41.6
NW	2	2.2
CALM	9	10.1
INOP	0	0.0

FREQUENCY OF READINGS WITH WIND DIRECTION

WIND DIRECTION	HOURS OF WIND OCCURRENCE	HOURS OF READINGS	FREQUENCY OF READINGS WITH WIND
N	39	3	7.7
NE	73	8	11.0
E	72	13	18.1
SE	55	2	3.6
S	66	4	6.1
SW	52	11	21.2
W	180	37	20.6
NW	119	2	1.7
CALM	37	9	24.3
INOP	0	0	0.0

NOTE.1. READINGS CONSIDERED IN FREQUENCY DISTRIBUTION TABLES ARE THOSE GREATER THAN 0.0001 PPB

2. VALUE OF ****** INDICATES NO DATA AVAILABLE OR INSUFFICIENT DATA

3. WIND DATA UTILIZED FOR CORRELATION PURPOSES WAS MONITORED AT ST ALBERT S050

ALBERTA ENVIRONMENT
DIVISION OF POLLUTION CONTROL
AIR QUALITY CONTROL BRANCH

WIND FREQUENCY TABLE

STATION: ST ALBERT S050

MONTH: AUG. 1984

INSTRUMENT TYPE: ATHABASCA RES.

DIRECTION	DEGREES	TOTAL HOURS	PERCENT	AVERAGE SPEED IN KM/H
N	338 TO 22	72	9.68	7.5
NE	23 TO 67	48	6.45	7.3
E	68 TO 112	73	9.81	6.6
SE	113 TO 157	50	6.72	8.5
S	158 TO 202	90	12.10	8.0
SW	203 TO 247	83	11.16	6.2
W	248 TO 292	191	25.67	8.6
NW	293 TO 337	123	16.53	13.2
CALM	0 TO 000	14	1.88	

AVERAGE WIND SPEED 8.6 KM/H

WIND INSTRUMENT OPERATIONAL 744 HOURS (100.00%)

AMBIENT AIR MONITORING REPORT FOR THE MONTH OF AUG. 1984

STATION: ST ALBER S050

POLLUTANT	MONITOR	RANGE MAX.	PEAK HOURLY	PEAK DAILY	MONTH MEAN	% OPER
NOX		PPM	0.08	0.03	0.01	88.0
NO		PPM	0.05	0.02	0.00	88.0
NO2		PPM	0.05	0.03	0.01	88.0
SO2		PPM	0.01	0.00	0.00	96.0
H2S		PPB	2.0	0.26	0.05	95.7

@ NOTE CARBON MONOXIDE CONTAINS PEAK 8-HR AVERAGE INSTEAD OF PEAK DAILY AVERAGE

S050 AUG. 84

COMPARISON TO CLEAN AIR (MAXIMUM LEVELS) REGULATION

POLLUTANT	REGULATIONS		NO.IN EXCESS OF REGULATION	% OF TIME PER MONTH THAT REG. WAS EXCEEDED
NO2	1-HOUR	0.21 PPM	0	0.0
	24-HOUR	0.11 PPM	0	0.0
SO2	1-HOUR	0.17 PPM	0	0.0
	24-HOUR	0.06 PPM	0	0.0
H2S	1-HOUR	10.00 PPB	0	0.0
	24-HOUR	3.00 PPB	0	0.0

NOTE. COMPARISON TO 8-HOUR REGULATION WAS WITH TIME PERIODS 0001 - 0800 0801 - 1600 AND 1601 - 2400

NOTE. COMPARISON TO 24-HOUR REGULATION WAS ON A CALENDAR DAY BASIS ONLY

NOTE. OTHER POLLUTANTS NOT SPECIFIED IN THE CLEAN AIR (MAXIMUM LEVELS) REGULATIONS

S050 AUG. 84

WIND DIRECTION AND WIND SPEED (KM/H)

DAY	1	2	3	4	5	6	7	8	9	10	11	12	13	14	15	16	17	18	19	20	21	22	23
1	S	S	S	S	S	S	S	S	S	S	S	S	S	S	S	S	S	S	S	SE	E	SE	SE
	7	7	10	7	7	10	10	10	10	10	14	14	14	14	10	10	10	10	10	7	7	7	7
2	E	E	NE	NE	NE	NE	E	NE	NE	NE	E	SE	SE	SE	S	SE	E	SE	SE	E	S	S	S
	7	7	7	10	7	7	7	7	7	7	7	7	7	7	7	3	10	10	7	7	7	10	7
3	SW	S	C	C	S	SW	W	W	W	W	W	W	W	SW	N	W	N	NE	W	N	NE	E	E
	3	3	0	0	3	3	7	7	7	7	7	10	7	7	7	7	7	7	7	7	7	7	7
4	NW	W	W	W	W	C	W	W	W	W	NW	NW	W	W	NW	NW	N	NE	NE	N	N	N	NE
	3	3	3	3	3	0	3	7	7	7	7	7	10	10	10	10	10	10	10	7	7	7	7
5	NW	NW	N	N	W	N	N	C	C	W	W	SW	NW	N	E	SW	E	E	NE	E	E	S	E
	3	3	7	3	3	3	3	0	0	7	3	3	3	3	3	3	7	7	7	3	3	7	3
6	N	N	E	NE	NE	NE	E	SE	E	SE	S	W	NW	NW	N	NW	NW	W	W	NW	NE	N	W
	3	3	7	7	7	7	7	10	7	10	3	21	14	14	10	14	14	14	25	18	14	7	7
7	W	W	NW	NW	SW	SW	W	W	SW	SW	SW	SW	W	W	W	NW	NW	NW	W	N	NW	W	W
	7	7	7	3	3	7	7	7	7	10	10	10	14	18	21	21	18	18	10	7	7	7	7
8	W	W	NW	NW	NW	NW	NW	NW	NW	NW	NW	NW	NW	NW	NW	NW	NW	NW	N	N	NE	E	C
	7	14	18	18	21	18	18	18	18	18	14	18	18	14	10	14	14	7	7	7	3	7	0
9	S	SW	S	S	S	SE	S	S	SW	SW	SW	SW	SW	SW	S	SW	S	S	S	SE	E	SE	N
	3	3	3	3	3	3	7	10	10	7	7	7	7	7	7	7	10	10	10	7	7	7	3
10	E	NW	NW	NW	W	W	NW	NW	NW	NW	N	N	N	N	N	NE	NE	E	S	SE	N	NE	NE
	7	7	3	3	3	3	7	10	10	10	10	14	10	7	7	7	7	7	3	3	3	7	7
11	NE	NE	NE	N	N	E	S	S	SE	SE	SW	SW	W	W	W	SW	W	SW	S	S	SE	E	E
	7	7	7	7	7	3	7	7	7	7	3	7	7	7	10	10	10	10	7	7	7	7	7
12	SE	S	S	SE	S	SE	S	S	S	S	S	S	SW	SW	W	W	SW	SW	S	S	S	SW	W
	7	10	10	10	7	7	7	7	7	7	7	7	10	10	7	10	10	10	10	7	7	3	14
13	W	W	W	SW	SW	W	W	W	W	W	N	NW	NW	W	W	NW	NW	NW	NW	N	NW	NW	N
	7	7	3	3	3	7	3	7	7	7	3	7	10	7	14	14	18	18	10	10	10	10	10
14	E	E	NE	NE	NE	NE	E	E	E	SE	W	W	E	E	NE	E	E	E	E	E	NE	E	NE
	10	10	7	7	7	10	10	7	10	7	3	7	3	3	7	7	7	10	7	7	7	7	7
15	E	E	NE	NE	NE	NE	E	E	E	SE	W	W	NW	NW	N	N	N	N	N	N	N	NE	N
	10	10	7	7	7	10	10	7	10	7	3	7	7	7	7	7	10	7	7	7	7	7	3
16	C	C	N	N	N	NE	C	SW	SW	S	SW	S	SW	SW	SW	SW	SW	W	W	NW	N	E	E
	0	0	3	3	3	3	0	3	3	7	7	7	3	7	7	7	7	7	7	7	7	7	7
17	E	E	E	E	NE	NE	E	E	S	SW	SE	SE	S	S	SW	W	W	SW	SW	W	W	W	SW
	7	7	7	7	7	10	7	7	3	3	7	7	3	3	3	7	10	7	7	7	3	3	3
18	W	SW	W	NW	NW	NW	NW	N	N	N	NE	N	N	N	N	NE	N	NW	N	N	N	NW	W
	10	10	7	10	10	10	10	7	10	7	7	3	3	7	7	7	7	14	18	10	10	3	7
19	W	W	W	SW	SW	W	W	W	SW	W	SW	SW	SW	SW	SW	W	W	W	W	W	W	W	W
	7	3	3	3	3	7	7	7	7	7	7	7	10	14	10	10	14	14	18	7	7	7	7
20	NW	NW	NW	W	NW	NW	W	W	NW	NW	W	W	W	NW	NW	NW	NW	NW	NW	NW	NW	NW	NW
	18	18	14	14	14	10	14	14	14	14	14	14	18	21	14	14	14	18	10	10	10	7	7
21	W	W	W	W	W	W	W	W	SW	SW	S	S	S	S	S	S	S	S	S	S	SE	E	E
	7	3	7	7	3	3	3	3	3	7	7	7	7	7	7	10	10	10	7	7	7	7	7
22	S	S	S	S	S	S	S	S	S	S	S	S	S	S	S	SW	SW	SW	S	SE	E	E	SW
	7	7	7	7	7	7	10	10	10	7	10	10	10	10	10	10	10	7	7	3	7	7	3
23	SE	W	W	NW	N	N	NW	C	N	N	N	NW	N	N	N	N	N	NW	NW	N	NW	W	W
	3	7	7	7	10	7	7	0	10	10	10	10	18	18	14	10	7	7	7	3	3	7	3
24	W	W	W	W	W	W	W	W	W	C	E	E	S	SW	SW	W	SW	W	NW	NW	NW	W	SW
	7	3	7	7	7	3	7	3	3	0	3	3	3	3	7	7	7	18	7	10	3	3	3
25	W	W	W	W	W	W	NW	N	W	SW	W	W	SW	W	W	W	W	W	W	SW	W	W	SW
	3	3	3	3	3	3	7	3	3	3	3	3	7	10	10	14	14	10	7	7	7	7	7
26	SW	SW	W	SW	SW	SW	SW	SW	W	NW	NW	N	NW	W	W	SW	W	W	W	W	W	SW	W
	7	7	7	3	3	7	3	7	7	7	7	7	7	3	7	7	7	10	7	3	3	3	7
27	NW	W	SW	W	W	W	SW	NW	E	E	W	NW	N	NW	NW	NW	NW	W	W	W	W	W	W
	3	3	7	7	7	3	3	3	7	3	7	14	25	21	21	21	10	14	10	7	7	7	7
28	NW	W	W	W	W	W	W	W	NW	NW	NW	NW	NW	W	W	W	W	NW	W	W	W	W	W
	7	7	7	10	14	14	14	14	25	21	25	28	28	25	18	28	28	21	21	14	7	10	18
29	W	W	W	W	NW	W	W	W	NW	NW	NW	NW	NW	NW	NW	NW	NW	NW	NW	N	NW	N	NW
	18	14	18	21	25	25	25	32	36	36	32	32	32	28	28	25	25	18	14	7	7	3	3
30	NW	NW	W	W	W	W	C	W	SW	SW	C	E	SE	N	NE	NE	NE	E	E	E	E	E	E
	7	7	7	7	7	3	0	3	7	3	0	3	3	7	7	7	7	7	7	3	3	7	7
31	SE	SE	SE	SE	SE	SE	SE	E	SE	SE	S	S	S	SE	SE	SE	S	SE	SE	SE	SE	SE	SE
	7	7	7	7	10	10	10	7	10	10	10	14	14	14	18	18	14	14	14	14	14	14	10

OXIDES OF NITROGEN - NOX S050

PPM ONE HOUR AVERAGE

MONTH AUG. 84

DAY	0001-0800 AVE.	NO.	0801-1600 AVE.	NO.	1601-2400 AVE.	NO.	FULL DAY AVE.	NO.	DAILY PEAK
1	0.04	5	0.02	8	0.03	8	0.03	21	0.06
2	0.03	7	0.03	8	0.03	8	0.03	23	0.06
3	0.03	7	0.01	7	0.03	8	0.02	22	0.07
4	0.04	7	0.01	8	0.01	2	0.02	17	0.07
5	0.0	0	0.0	0	0.0	0	0.0	0	0.0
6	0.0	0	0.0	0	0.0	0	0.0	0	0.0
7	0.00	6	0.01	6	0.01	8	0.01	20	0.02
8	0.00	7	0.01	8	0.04	8	0.01	23	0.07
9	0.04	7	0.01	8	0.04	8	0.03	23	0.08
10	0.01	7	0.01	8	0.02	8	0.01	23	0.06
11	0.01	7	0.01	8	0.02	8	0.01	23	0.03
12	0.01	7	0.02	8	0.01	8	0.01	23	0.03
13	0.00	7	0.01	8	0.00	8	0.00	23	0.02
14	0.00	7	0.00	8	0.01	8	0.01	23	0.03
15	0.01	7	0.01	8	0.02	8	0.01	23	0.05
16	0.02	7	0.03	8	0.02	8	0.02	23	0.08
17	0.02	7	0.03	8	0.02	8	0.03	23	0.06
18	0.00	7	0.00	8	0.00	8	0.00	23	0.01
19	0.01	7	0.01	8	0.00	8	0.01	23	0.02
20	0.00	7	0.00	8	0.00	8	0.00	23	0.00
21	0.01	7	0.01	8	0.04	8	0.02	23	0.08
22	0.02	7	0.02	8	0.04	8	0.03	23	0.08
23	0.01	7	0.01	8	0.01	8	0.01	23	0.02
24	0.00	7	0.01	8	0.02	8	0.01	23	0.04
25	0.01	7	0.01	8	0.01	8	0.01	23	0.02
26	0.00	7	0.00	8	0.01	8	0.01	23	0.02
27	0.01	7	0.02	8	0.00	8	0.01	23	0.06
28	0.00	7	0.00	8	0.01	8	0.00	23	0.01
29	0.00	7	0.01	8	0.02	8	0.01	23	0.03
30	0.02	7	0.02	8	0.03	8	0.03	23	0.07
31	0.03	7	0.03	8	0.02	8	0.02	23	0.05

SUMMARY OF PEAK READINGS, PEAK AVERAGES, MONTHLY STATS

PEAK HOURLY READING 0.08 ON DAY 9 2001 - 2100 HOURS

WIND READINGS HOUR BEFORE/DURING /AFTER PEAK HOURLY READING

SE 7 / E 7 / SE 7

PEAK CALENDAR DAY AVG. 0.03 ON DAY 1

ARITHMETIC MEAN 0.01 NO. RDGS. 655 HRS. (%OPER. 88.04%)

POLLUTANT NOT SPECIFIED IN THE CLEAN AIR (MAXIMUM LEVELS) REGULATIONS

FREQUENCY DISTRIBUTION

RANGE	NO.OF RDGS.	PERCENT	CUMULATIVE
0.0 - 0.000	203	31.0	31.0
0.001 - 0.110	452	69.0	100.0
0.111 - 0.210	0	0.0	100.0
0.211 - 0.420	0	0.0	100.0
0.421 OR OVER	0	0.0	100.0

ALL MEANS ARE ARITHMETIC UNLESS OTHERWISE SPECIFIED

OXIDES OF NITROGEN - NOX S050

PPM ONE HOUR AVERAGE

MONTH AUG. 84

DAY	1	2	3	4	5	6	7	8	9	10	11	12
1	*****	*****	0.06	0.02	0.04	0.05	*****	0.04	0.05	0.03	0.03	0.0
2	0.04	0.03	0.02	0.02	0.02	0.03	*****	0.05	0.03	0.03	0.03	0.0
3	0.03	0.02	0.02	0.02	0.03	0.03	*****	0.03	0.01	0.01	0.01	0.0
4	0.07	0.03	0.03	0.05	0.04	0.04	*****	0.02	0.02	0.01	0.01	0.01
5	*****	*****	*****	*****	*****	*****	*****	*****	*****	*****	*****	*****
6	*****	*****	*****	*****	*****	*****	*****	*****	*****	*****	*****	*****
7	0.00	0.00	0.00	0.00	0.00	0.00	*****	*****	*****	*****	0.01	0.0
8	0.01	0.00	0.00	0.00	0.00	0.00	*****	0.01	0.00	0.01	0.01	0.00
9	0.07	0.05	0.03	0.02	0.03	0.04	*****	0.03	0.02	0.01	0.02	0.01
10	0.03	0.01	0.01	0.00	0.00	0.01	*****	0.02	0.01	0.01	0.01	0.0
11	0.01	0.01	0.01	0.01	0.00	0.01	*****	0.02	0.02	0.02	0.02	0.0
12	0.02	0.01	0.01	0.01	0.01	0.01	*****	0.01	0.02	0.03	0.02	0.02
13	0.00	0.00	0.01	0.00	0.00	0.01	*****	0.01	0.01	0.01	0.02	0.01
14	0.00	0.00	0.00	0.00	0.00	0.00	*****	0.01	0.00	0.00	0.00	0.0
15	0.01	0.01	0.00	0.01	0.01	0.01	*****	0.01	0.01	0.01	0.02	0.0
16	0.02	0.02	0.01	0.01	0.02	0.02	*****	0.03	0.06	0.08	0.02	0.0
17	0.03	0.02	0.02	0.02	0.02	0.02	*****	0.03	0.06	0.04	0.04	0.04
18	0.00	0.00	0.00	0.00	0.00	0.00	*****	0.01	0.01	0.01	0.00	0.00
19	0.00	0.00	0.01	0.01	0.01	0.01	*****	0.00	0.00	0.02	0.01	0.0
20	0.00	0.00	0.00	0.00	0.00	0.00	*****	0.00	0.00	0.00	0.00	0.0
21	0.00	0.01	0.01	0.00	0.01	0.01	*****	0.02	0.02	0.02	0.02	0.02
22	0.03	0.06	0.03	0.01	0.00	0.01	*****	0.03	0.03	0.01	0.03	0.02
23	0.02	0.02	0.02	0.00	0.00	0.00	*****	0.01	0.01	0.01	0.01	0.0
24	0.00	0.00	0.00	0.00	0.00	0.00	*****	0.01	0.01	0.01	0.00	0.0
25	0.02	0.02	0.01	0.01	0.02	0.01	*****	0.01	0.01	0.01	0.01	0.0
26	0.00	0.00	0.00	0.00	0.00	0.01	*****	0.01	0.01	0.01	0.00	0.00
27	0.00	0.00	0.00	0.00	0.00	0.01	*****	0.03	0.06	0.06	0.03	0.01
28	0.00	0.00	0.00	0.00	0.00	0.00	*****	0.00	0.00	0.01	0.00	0.0
29	0.00	0.00	0.00	0.00	0.00	0.00	*****	0.01	0.01	0.01	0.00	0.0
30	0.02	0.02	0.02	0.01	0.01	0.02	*****	0.04	0.04	0.02	0.02	0.02
31	0.03	0.02	0.02	0.02	0.02	0.02	*****	0.05	0.05	0.04	0.03	0.02

DAY	13	14	15	16	17	18	19	20	21	22	23	24
1	0.01	0.01	0.01	0.01	0.02	0.02	0.01	0.03	0.04	0.04	0.04	0.0
2	0.03	0.03	0.02	0.02	0.02	0.02	0.02	0.03	0.03	0.03	0.04	0.0
3	0.01	0.02	0.02	*****	0.01	0.02	0.01	0.01	0.04	0.04	0.07	0.0
4	0.01	0.01	0.01	0.01	0.01	*****	0.01	*****	*****	*****	*****	*****
5	*****	*****	*****	*****	*****	*****	*****	*****	*****	*****	*****	*****
6	*****	*****	*****	*****	*****	*****	*****	*****	*****	*****	*****	*****
7	0.00	0.01	0.01	0.00	0.01	0.01	0.01	0.02	0.01	0.01	0.01	0.0
8	0.00	0.00	0.01	0.01	0.01	0.01	0.00	0.03	0.07	0.06	0.04	0.06
9	0.01	0.01	0.01	0.01	0.01	0.01	0.01	0.05	0.08	0.06	0.03	0.04
10	0.01	0.01	0.01	0.01	0.01	0.01	0.01	0.02	0.03	0.06	0.03	0.0
11	0.01	0.00	0.00	0.01	0.00	0.01	0.01	0.01	0.03	0.02	0.02	0.0
12	0.01	0.01	0.01	0.01	0.00	0.00	0.00	0.01	0.01	0.01	0.01	0.0
13	0.01	0.01	0.00	0.00	0.00	0.00	0.00	0.00	0.00	0.00	0.00	0.00
14	0.00	0.00	0.00	0.00	0.01	0.00	0.01	0.02	0.02	0.01	0.03	0.01
15	0.01	0.01	0.00	0.01	0.00	0.00	0.01	0.01	0.04	0.05	0.03	0.0
16	0.01	0.00	0.00	0.00	0.00	0.00	0.00	0.01	0.02	0.04	0.04	0.0
17	0.03	0.02	0.02	0.01	0.01	0.01	0.01	0.02	0.02	0.02	0.04	0.05
18	0.00	0.00	0.00	0.00	0.00	0.00	0.00	0.00	0.00	0.00	0.00	0.00
19	0.01	0.01	0.00	0.00	0.00	0.00	0.00	0.00	0.01	0.01	0.00	0.0
20	0.00	0.00	0.00	0.00	0.00	0.00	0.00	0.00	0.00	0.00	0.00	0.0
21	0.01	0.01	0.01	0.01	0.00	0.01	0.01	0.02	0.06	0.08	0.06	0.0
22	0.02	0.01	0.01	0.00	0.00	0.01	0.02	0.06	0.07	0.08	0.05	0.02
23	0.01	0.00	0.00	0.00	0.00	0.00	0.00	0.00	0.02	0.01	0.01	0.0
24	0.03	0.02	0.01	0.00	0.00	0.01	0.01	0.00	0.01	0.03	0.04	0.0
25	0.00	0.01	0.01	0.01	0.01	0.00	0.01	0.01	0.01	0.01	0.01	0.0
26	0.00	0.00	0.00	0.00	0.00	0.01	0.00	0.02	0.02	0.02	0.01	0.01
27	0.00	0.00	0.00	0.00	0.00	0.00	0.01	0.01	0.01	0.00	0.00	0.00
28	0.00	0.00	0.01	0.01	0.01	0.01	0.01	0.01	0.01	0.00	0.00	0.0
29	0.02	0.01	0.01	0.01	0.01	0.01	0.00	0.01	0.02	0.02	0.03	0.0
30	0.02	0.02	0.02	0.02	0.02	0.02	0.02	0.03	0.04	0.07	0.04	0.0
31	0.02	0.02	0.02	0.02	0.03	0.03	0.02	0.02	0.02	0.02	0.02	0.01

OXIDES OF NITROGEN - NOX S050

FREQUENCY DISTRIBUTION TABLES

MONTH AUG. 84

PERCENT OF READINGS WITH WIND DIRECTION

WIND DIRECTION	POLLUTANT OCC. HOURS	FREQUENCY OF OCCURRENCE %
N	35	7.7
NE	32	7.1
E	51	11.3
SE	46	10.2
S	78	17.3
SW	54	11.9
W	98	21.7
NW	48	10.6
CALM	10	2.2
INOP	0	0.0

FREQUENCY OF READINGS WITH WIND DIRECTION

WIND DIRECTION	HOURS OF WIND OCCURRENCE	HOURS OF READINGS	FREQUENCY OF READINGS WITH WIND
N	60	35	58.3
NE	40	32	80.0
E	59	51	86.4
SE	47	46	97.9
S	81	78	96.3
SW	77	54	70.1
W	171	98	57.3
NW	110	48	43.6
CALM	10	10	100.0
INOP	0	0	0.0

NOTE.1. READINGS CONSIDERED IN FREQUENCY DISTRIBUTION TABLES ARE THOSE GREATER THAN 0.0010 PPM

2. VALUE OF ****** INDICATES NO DATA AVAILABLE OR INSUFFICIENT DATA

3. WIND DATA UTILIZED FOR CORRELATION PURPOSES WAS MONITORED AT ST ALBERT S050

OXIDES OF NITROGEN - NO S050

PPM ONE HOUR AVERAGE

MONTH AUG. 84

DAY	0001-0800 AVE.	NO.	0801-1600 AVE.	NO.	1601-2400 AVE.	NO.	FULL DAY AVE.	NO.	DAILY PEAK
1	0.02	5	0.00	8	0.01	8	0.01	21	0.03
2	0.01	7	0.00	8	0.00	8	0.00	23	0.03
3	0.00	7	0.00	7	0.01	8	0.00	22	0.02
4	0.01	7	0.00	8	0.00	2	0.01	17	0.03
5	0.0	0	0.0	0	0.0	0	0.0	0	0.0
6	0.0	0	0.0	0	0.0	0	0.0	0	0.0
7	0.00	6	0.00	6	0.00	8	0.00	20	0.00
8	0.00	7	0.00	8	0.02	8	0.01	23	0.04
9	0.01	7	0.00	8	0.01	8	0.01	23	0.04
10	0.00	7	0.00	8	0.01	8	0.00	23	0.04
11	0.00	7	0.00	8	0.00	8	0.00	23	0.01
12	0.00	7	0.01	8	0.00	8	0.00	23	0.01
13	0.00	7	0.00	8	0.00	8	0.00	23	0.00
14	0.00	7	0.00	8	0.00	8	0.00	23	0.00
15	0.00	7	0.00	8	0.01	8	0.00	23	0.03
16	0.01	7	0.01	8	0.01	8	0.01	23	0.04
17	0.00	7	0.01	8	0.00	8	0.00	23	0.03
18	0.00	7	0.00	8	0.00	8	0.00	23	0.00
19	0.00	7	0.00	8	0.00	8	0.00	23	0.00
20	0.00	7	0.00	8	0.00	8	0.00	23	0.00
21	0.00	7	0.00	8	0.01	8	0.01	23	0.05
22	0.01	7	0.00	8	0.01	8	0.01	23	0.04
23	0.00	7	0.00	8	0.00	8	0.00	23	0.01
24	0.00	7	0.00	8	0.00	8	0.00	23	0.01
25	0.00	7	0.00	8	0.00	8	0.00	23	0.00
26	0.00	7	0.00	8	0.00	8	0.00	23	0.00
27	0.00	7	0.01	8	0.00	8	0.00	23	0.04
28	0.00	7	0.00	8	0.00	8	0.00	23	0.00
29	0.00	7	0.00	8	0.01	8	0.00	23	0.01
30	0.01	7	0.01	8	0.02	8	0.02	23	0.04
31	0.00	7	0.02	8	0.01	8	0.01	23	0.03

SUMMARY OF PEAK READINGS, PEAK AVERAGES, MONTHLY STATS

PEAK HOURLY READING 0.05 ON DAY 21 2101 - 2200 HOURS

WIND READINGS HOUR BEFORE/DURING /AFTER PEAK HOURLY READING

SE 7 / E 7 / E 7

PEAK CALENDAR DAY AVG. 0.02 ON DAY 30

ARITHMETIC MEAN 0.00 NO. RDGS. 655 HRS. (%OPER. 88.04%)

POLLUTANT NOT SPECIFIED IN THE CLEAN AIR (MAXIMUM LEVELS) REGULATIONS

FREQUENCY DISTRIBUTION

RANGE	NO.OF RDGS.	PERCENT	CUMULATIVE
0.0 - 0.000	513	78.3	78.3
0.001 - 0.110	142	21.7	100.0
0.111 - 0.210	0	0.0	100.0
0.211 - 0.420	0	0.0	100.0
0.421 OR OVER	0	0.0	100.0

ALL MEANS ARE ARITHMETIC UNLESS OTHERWISE SPECIFIED

OXIDES OF NITROGEN - NO S050

PPM ONE HOUR AVERAGE

MONTH AUG. 84

DAY	1	2	3	4	5	6	7	8	9	10	11	12
1	*****	*****	0.02	0.01	0.02	0.02	*****	0.03	0.02	0.01	0.00	0.00
2	0.00	0.00	0.00	0.00	0.00	0.01	*****	0.03	0.01	0.01	0.00	0.00
3	0.00	0.00	0.00	0.00	0.00	0.00	*****	0.00	0.00	0.00	0.00	0.00
4	0.03	0.00	0.01	0.02	0.01	0.01	*****	0.01	0.01	0.00	0.00	0.00
5	*****	*****	*****	*****	*****	*****	*****	*****	*****	*****	*****	*****
6	*****	*****	*****	*****	*****	*****	*****	*****	*****	*****	*****	*****
7	0.00	0.00	0.00	0.00	0.00	0.00	*****	*****	*****	*****	0.00	0.00
8	0.00	0.00	0.00	0.00	0.00	0.00	*****	0.00	0.00	0.00	0.00	0.00
9	0.03	0.02	0.00	0.00	0.01	0.02	*****	0.01	0.00	0.00	0.00	0.00
10	0.01	0.00	0.00	0.00	0.00	0.00	*****	0.01	0.01	0.00	0.00	0.00
11	0.00	0.00	0.00	0.00	0.00	0.00	*****	0.00	0.01	0.01	0.01	0.00
12	0.00	0.00	0.00	0.00	0.00	0.00	*****	0.00	0.01	0.01	0.01	0.01
13	0.00	0.00	0.00	0.00	0.00	0.00	*****	0.00	0.00	0.00	0.00	0.00
14	0.00	0.00	0.00	0.00	0.00	0.00	*****	0.00	0.00	0.00	0.00	0.00
15	0.00	0.00	0.00	0.00	0.00	0.00	*****	0.01	0.00	0.00	0.01	0.00
16	0.01	0.00	0.00	0.00	0.01	0.02	*****	0.03	0.04	0.04	0.01	0.01
17	0.01	0.00	0.00	0.00	0.01	0.00	*****	0.01	0.03	0.01	0.02	0.00
18	0.00	0.00	0.00	0.00	0.00	0.00	*****	0.00	0.00	0.00	0.00	0.00
19	0.00	0.00	0.00	0.00	0.00	0.00	*****	0.00	0.00	0.00	0.00	0.00
20	0.00	0.00	0.00	0.00	0.00	0.00	*****	0.00	0.00	0.00	0.00	0.00
21	0.00	0.00	0.00	0.00	0.00	0.01	*****	0.01	0.01	0.01	0.01	0.00
22	0.00	0.04	0.01	0.00	0.00	0.00	*****	0.02	0.01	0.00	0.01	0.01
23	0.00	0.00	0.00	0.00	0.00	0.00	*****	0.00	0.00	0.00	0.00	0.00
24	0.00	0.00	0.00	0.00	0.00	0.00	*****	0.00	0.00	0.01	0.00	0.00
25	0.00	0.00	0.00	0.00	0.00	0.00	*****	0.00	0.00	0.00	0.00	0.00
26	0.00	0.00	0.00	0.00	0.00	0.00	*****	0.00	0.00	0.00	0.00	0.00
27	0.00	0.00	0.00	0.00	0.00	0.00	*****	0.01	0.04	0.03	0.01	0.00
28	0.00	0.00	0.00	0.00	0.00	0.00	*****	0.00	0.00	0.00	0.00	0.00
29	0.00	0.00	0.00	0.00	0.00	0.00	*****	0.00	0.00	0.00	0.00	0.00
30	0.01	0.01	0.01	0.01	0.01	0.01	*****	0.03	0.03	0.01	0.01	0.01
31	0.00	0.00	0.00	0.00	0.00	0.00	*****	0.03	0.03	0.03	0.02	0.01

DAY	13	14	15	16	17	18	19	20	21	22	23	24
1	0.00	0.00	0.00	0.00	0.01	0.01	0.00	0.01	0.01	0.00	0.00	0.0
2	0.00	0.00	0.00	0.00	0.00	0.00	0.00	0.00	0.00	0.00	0.00	0.0
3	0.00	0.00	0.01	*****	0.00	0.00	0.00	0.00	0.00	0.01	0.02	0.0
4	0.00	0.00	0.00	0.00	0.00	*****	0.00	*****	*****	*****	*****	*****
5	*****	*****	*****	*****	*****	*****	*****	*****	*****	*****	*****	*****
6	*****	*****	*****	*****	*****	*****	*****	*****	*****	*****	*****	*****
7	0.00	0.00	0.00	0.00	0.00	0.00	0.00	0.00	0.00	0.00	0.00	0.0
8	0.00	0.00	0.00	0.00	0.00	0.00	0.00	0.02	0.04	0.03	0.02	0.0
9	0.00	0.00	0.00	0.00	0.00	0.00	0.00	0.01	0.04	0.02	0.01	0.0
10	0.00	0.00	0.00	0.00	0.00	0.00	0.00	0.00	0.01	0.04	0.01	0.0
11	0.00	0.00	0.00	0.00	0.00	0.00	0.00	0.00	0.00	0.00	0.00	0.0
12	0.00	0.00	0.00	0.00	0.00	0.00	0.00	0.00	0.00	0.00	0.00	0.0
13	0.00	0.00	0.00	0.00	0.00	0.00	0.00	0.00	0.00	0.00	0.00	0.0
14	0.00	0.00	0.00	0.00	0.00	0.00	0.00	0.00	0.00	0.00	0.00	0.0
15	0.00	0.00	0.00	0.00	0.00	0.00	0.00	0.00	0.02	0.03	0.01	0.0
16	0.00	0.00	0.00	0.00	0.00	0.00	0.00	0.00	0.00	0.02	0.02	0.0
17	0.00	0.00	0.00	0.00	0.00	0.00	0.00	0.00	0.00	0.00	0.00	0.0
18	0.00	0.00	0.00	0.00	0.00	0.00	0.00	0.00	0.00	0.00	0.00	0.0
19	0.00	0.00	0.00	0.00	0.00	0.00	0.00	0.00	0.00	0.00	0.00	0.0
20	0.00	0.00	0.00	0.00	0.00	0.00	0.00	0.00	0.00	0.00	0.00	0.0
21	0.00	0.00	0.00	0.00	0.00	0.00	0.00	0.00	0.02	0.05	0.02	0.0
22	0.00	0.00	0.00	0.00	0.00	0.00	0.00	0.02	0.02	0.03	0.03	0.0
23	0.00	0.00	0.00	0.00	0.00	0.00	0.00	0.00	0.00	0.00	0.01	0.0
24	0.00	0.00	0.00	0.00	0.00	0.00	0.00	0.00	0.00	0.00	0.00	0.0
25	0.00	0.00	0.00	0.00	0.00	0.00	0.00	0.00	0.00	0.00	0.00	0.0
26	0.00	0.00	0.00	0.00	0.00	0.00	0.00	0.00	0.00	0.00	0.00	0.0
27	0.00	0.00	0.00	0.00	0.00	0.00	0.00	0.00	0.00	0.00	0.00	0.0
28	0.00	0.00	0.00	0.00	0.00	0.00	0.00	0.00	0.00	0.00	0.00	0.0
29	0.01	0.00	0.00	0.00	0.00	0.00	0.00	0.00	0.01	0.01	0.01	0.0
30	0.01	0.01	0.01	0.01	0.01	0.01	0.01	0.02	0.03	0.04	0.03	0.0
31	0.01	0.01	0.01	0.01	0.03	0.02	0.00	0.00	0.00	0.00	0.00	0.0

S050 JULY 84

WIND DIRECTION AND WIND SPEED (KM/H)

DAY	1	2	3	4	5	6	7	8	9	10	11	12	13	14	15	16	17	18	19	20	21	22	23	24
1	W	W	W	W	W	W	W	W	W	W	W	W	W	W	NW	NW	NW	NW	NW	W	W	W	W	W
	7	7	7	7	7	7	7	7	10	14	21	21	21	21	25	25	25	21	10	10	10	18	14	7
2	W	W	W	NW	W	W	NW	NW	NW	NW	NW	NW	NW	NW	NW	NW	NW	NW	NW	NW	W	W	W	7
	10	7	7	14	10	10	18	21	25	25	25	21	21	18	18	18	14	10	10	10	7	7	7	7
3	W	W	W	W	W	W	W	W	NW	NW	NW	NW	NW	NW	NW	NW	NW	NW	N	NW	NE	E	E	E
	7	7	7	7	7	7	14	18	18	21	21	21	18	18	14	14	14	10	7	7	3	3	7	7
4	E	E	E	E	E	E	NE	E	E	E	SE	SE	S	S	SE	SE	NE	NE	NE	NE	E	E	E	E
	7	7	7	10	7	7	7	7	7	10	10	14	10	7	10	10	3	7	7	10	7	7	7	7
5	E	E	E	NE	E	E	SE	SE	SE	S	SE	SE	SE	S	SE	SE	SE	SE	NE	E	NE	NE	NE	E
	7	7	7	7	7	7	7	10	14	18	21	21	21	25	25	21	25	18	7	7	10	14	14	14
6	NE	NE	NE	NE	NW	NW	N	N	NW	NE	NW	W	NW	W	W	W	W	W	W	W	W	W	W	W
	14	14	14	7	10	10	7	7	7	3	7	14	10	14	7	10	7	21	18	10	10	7	7	7
7	SW	W	W	W	W	W	W	W	W	W	W	W	NW	NW	NW	NW	NW	NW	NW	NW	W	W	W	W
	7	7	7	7	7	10	10	10	14	18	25	21	25	25	25	25	21	14	10	7	7	7	7	7
8	W	W	W	W	W	W	W	W	W	W	W	NW	NW	NW	NW	W	NW	NW	NW	NW	NW	NW	W	W
	7	7	7	7	7	7	7	10	10	14	21	25	21	18	18	18	18	18	14	10	7	7	7	7
9	W	W	W	W	W	W	W	W	NW	NW	NW	W	W	W	NW	NW	NW	W	W	W	W	W	W	W
	7	7	7	7	7	7	7	10	14	14	14	14	18	18	14	10	10	10	7	3	3	3	7	7
10	W	W	W	W	SW	SW	W	SW	SW	SW	SW	SW	SW	SW	SW	SW	W	W	NW	E	E	E	NE	NE
	7	3	3	3	3	3	7	7	7	3	7	7	10	10	10	7	7	7	3	7	7	10	10	7
11	E	NE	NE	N	C	C	NW	N	C	S	SE	E	E	E	E	E	SE	SE	SE	SE	E	E	E	E
	7	3	3	3	0	0	3	3	0	3	3	7	7	7	10	7	10	10	10	7	7	7	7	7
12	SE	E	NE	NE	W	C	E	E	N	E	E	E	E	E	E	SE	C	NE	NW	C	N	NE	C	W
	7	3	3	7	3	0	10	10	10	10	10	10	10	10	10	10	0	7	7	0	7	3	0	7
13	W	W	W	W	W	W	W	W	W	W	NW	NW	N	W	W	N	N	NW	NW	N	E	W	NW	W
	7	7	7	7	7	7	9	10	14	14	10	10	14	14	10	10	9	9	9	5	5	7	7	7
14	NW	NW	W	W	W	W	W	W	NW	NW	NW	W	W	NW	NW	NW	NW	NW	NW	W	C	C	W	W
	7	7	7	7	7	7	10	10	14	14	14	14	14	14	18	14	14	10	10	7	0	0	7	7
15	SW	SW	SW	W	W	W	W	NW	NW	NW	NW	NW	NW	W	W	NW	NW	NW	NW	N	NE	N	N	N
	3	3	3	7	7	7	7	7	7	10	10	10	14	10	10	10	14	14	10	7	7	3	7	7
16	W	W	W	W	W	W	W	NW	W	NW	W	SW	W	W	W	W	W	SW	SW	S	S	S	S	S
	7	7	7	7	7	7	7	7	10	7	7	3	3	7	7	7	7	3	3	7	7	7	7	7
17	S	SW	W	C	E	W	N	W	NW	NW	NW	NW	NW	NW	N	NW	N	NW	N	N	NE	NE	NE	NE
	10	7	7	0	3	3	3	7	10	10	14	10	10	10	14	14	14	10	10	7	7	7	7	7
18	E	SW	W	W	N	C	W	SW	W	SE	SE	SE	SE	SE	SE	SE	SE	SE	SE	NW	NE	NE	E	E
	3	3	3	3	3	0	3	3	7	7	10	14	14	14	14	14	14	18	14	14	18	14	10	7
19	NW	N	C	NE	NE	N	C	N	NE	NE	NE	E	C	C	C	C	C	C	C	C	C	C	C	C
	3	7	0	3	3	3	0	3	7	7	10	7	0	0	0	0	0	0	0	0	0	0	0	0
20	W	E	E	NW	N	NE	N	N	N	NW	N	N	NW	N	NW	W	W	W	NW	W	SW	SW	SW	SW
	5	5	5	5	5	5	7	10	9	9	7	7	7	7	7	7	7	7	7	7	5	5	3	3
21	SW	SW	W	NW	W	W	SW	W	W	W	W	W	NW	N	NW	NW	NW	NW	N	NW	W	W	W	W
	5	5	5	3	3	5	7	7	10	14	14	12	10	12	14	12	12	12	14	9	9	7	7	7
22	SW	SW	SW	S	S	SW	S	S	S	S	S	S	S	NW	NW	NW	W	W	W	W	W	C	C	C
	3	3	3	3	3	3	3	7	7	10	10	10	14	10	10	10	14	10	10	7	3	0	0	0
23	SW	SW	SW	S	S	SW	S	S	S	SW	S	S	S	S	S	S	SW	SW	S	S	SE	SE	E	E
	3	3	3	3	3	3	3	7	7	10	10	10	14	14	14	14	14	10	10	10	7	7	7	7
24	E	SE	S	S	S	SW	SW	S	SW	W	S	S	SW	W	W	W	N	NE	NE	NE	E	E	E	E
	7	7	10	7	3	3	7	7	7	3	7	7	7	7	7	3	7	7	7	7	7	7	7	7
25	SW	SW	W	W	C	SE	S	SW	SW	SW	SW	S	S	SW	S	S	S	S	S	SE	SE	SE	SE	SE
	3	3	3	3	0	3	3	3	7	7	7	10	7	7	7	10	10	10	10	10	7	7	7	7
26	E	SE	SE	SE	SE	SE	SE	SE	SE	SE	S	SE	SE	SE	SE	SE	S	S	S	SE	SE	SE	S	S
	7	10	7	7	10	7	10	10	14	14	18	14	18	14	14	10	7	7	7	7	3	7	3	3
27	E	E	E	E	E	SW	SW	W	W	W	NW	N	N	N	N	NE	NE	NE	E	NE	N	NE	E	E
	3	7	7	7	3	3	3	7	7	10	10	7	10	14	10	10	7	7	7	7	7	7	7	7
28	NE	N	NE	NE	C	NW	N	N	NE	NE	NE	NE	NE	NE	NE	NE	E	E	E	E	E	E	NE	NE
	7	7	7	7	0	3	7	7	7	10	10	7	7	7	7	7	7	7	7	3	7	3	7	7
29	NE	NE	NE	C	C	C	N	NE	NE	NE	NE	NE	E	NE	E	NE	NE	NE	NE	NE	NE	E	SW	SW
	3	3	3	0	0	0	7	7	7	10	7	7	7	7	7	7	7	7	7	7	3	3	3	3
30	C	W	W	W	W	NW	C	NW	NW	NW	NW	N	NE	N	N	E	NW	E	E	E	C	C	W	W
	0	3	3	3	3	3	0	3	3	7	7	7	3	3	7	3	3	3	3	3	0	0	3	3
31	C	C	E	E	E	E	E	SE	S	S	S	S	S	S	S	S	S	S	S	S	S	S	S	S
	0	0	3	3	7	7	3	3	7	7	10	10	10	10	10	10	10	14	10	10	10	7	7	7

OXIDES OF NITROGEN - NOX S050

PPM ONE HOUR AVERAGE

MONTH JULY 84

DAY	0001-0800 AVE.	NO.	0801-1600 AVE.	NO.	1601-2400 AVE.	NO.	FULL DAY AVE.	NO.	DAILY PEAK
1	0.00	7	0.01	8	0.00	8	0.00	23	0.01
2	0.00	7	0.00	8	0.01	8	0.00	23	0.01
3	0.00	7	0.00	8	0.03	8	0.01	23	0.05
4	0.02	7	0.02	8	0.02	8	0.02	23	0.04
5	0.02	7	0.01	8	0.01	8	0.01	23	0.03
6	0.00	7	0.00	8	0.00	8	0.00	23	0.01
7	0.00	7	0.00	8	0.00	8	0.00	23	0.01
8	0.00	7	0.00	8	0.00	8	0.00	23	0.00
9	0.00	7	0.00	8	0.01	8	0.00	23	0.03
10	0.01	7	0.01	8	0.01	8	0.01	23	0.02
11	0.00	7	0.01	7	0.01	8	0.01	22	0.02
12	0.01	7	0.01	8	0.01	8	0.01	23	0.02
13	0.00	7	0.00	5	0.00	8	0.00	20	0.02
14	0.00	7	0.00	8	0.02	8	0.01	23	0.05
15	0.01	7	0.00	8	0.01	8	0.01	23	0.03
16	0.00	7	0.00	8	0.01	8	0.00	23	0.02
17	0.00	7	0.00	8	0.01	8	0.00	23	0.02
18	0.00	7	0.02	8	0.01	8	0.01	23	0.05
19	0.00	7	0.00	8	0.00	8	0.00	23	0.01
20	0.00	7	0.00	8	0.00	8	0.00	23	0.01
21	0.00	7	0.00	8	0.00	8	0.00	23	0.00
22	0.00	7	0.00	8	0.00	8	0.00	23	0.01
23	0.02	7	0.01	8	0.03	8	0.02	23	0.06
24	0.03	7	0.02	8	0.03	8	0.03	23	0.09
25	0.04	7	0.02	8	0.03	8	0.03	23	0.06
26	0.02	7	0.02	8	0.04	8	0.03	23	0.08
27	0.02	7	0.01	8	0.02	8	0.02	23	0.04
28	0.01	7	0.01	8	0.03	8	0.01	23	0.06
29	0.04	7	0.00	8	0.03	8	0.02	23	0.07
30	0.03	7	0.01	8	0.03	8	0.02	23	0.08
31	0.06	7	0.02	8	0.02	8	0.03	23	0.09

SUMMARY OF PEAK READINGS, PEAK AVERAGES, MONTHLY STATS

PEAK HOURLY READING 0.09 ON DAY 24 701 - 800 HOURS

WIND READINGS HOUR BEFORE/DURING /AFTER PEAK HOURLY READING

SW 7 / S 7 / SW 7

PEAK CALENDAR DAY AVG. 0.03 ON DAY 31

ARITHMETIC MEAN 0.01 NO. RDGS. 709 HRS. (%OPER. 95.30%)

POLLUTANT NOT SPECIFIED IN THE CLEAN AIR (MAXIMUM LEVELS) REGULATIONS

FREQUENCY DISTRIBUTION

RANGE	NO.OF RDGS.	PERCENT	CUMULATIVE
0.0 - 0.000	343	48.4	48.4
0.001 - 0.110	366	51.6	100.0
0.111 - 0.210	0	0.0	100.0
0.211 - 0.420	0	0.0	100.0
0.421 OR OVER	0	0.0	100.0

ALL MEANS ARE ARITHMETIC UNLESS OTHERWISE SPECIFIED

OXIDES OF NITROGEN - NOX S050

PPM ONE HOUR AVERAGE

MONTH JULY 84

DAY	1	2	3	4	5	6	7	8	9	10	11	12
1	0.00	0.00	0.00	0.00	0.00	0.00	*****	0.01	0.01	0.01	0.01	0.0
2	0.00	0.00	0.00	0.00	0.00	0.00	*****	0.00	0.00	0.00	0.00	0.0
3	0.00	0.00	0.00	0.00	0.01	0.01	*****	0.00	0.00	0.00	0.00	0.0
4	0.02	0.02	0.01	0.01	0.01	0.02	*****	0.03	0.04	0.04	0.02	0.01
5	0.02	0.02	0.01	0.01	0.01	0.02	*****	0.03	0.02	0.02	0.01	0.0
6	0.00	0.00	0.00	0.00	0.00	0.00	*****	0.00	0.00	0.01	0.00	0.0
7	0.00	0.00	0.00	0.00	0.00	0.00	*****	0.00	0.00	0.00	0.01	0.0
8	0.00	0.00	0.00	0.00	0.00	0.00	*****	0.00	0.00	0.00	0.00	0.00
9	0.00	0.00	0.00	0.00	0.00	0.00	*****	0.00	0.00	0.00	0.00	0.00
10	0.02	0.02	0.02	0.01	0.01	0.01	*****	0.01	0.01	0.01	0.01	0.0
11	0.00	0.00	0.00	0.00	0.00	0.01	*****	0.01	0.02	0.02	0.01	0.0
12	0.01	0.02	0.01	0.01	0.01	0.01	*****	0.01	0.01	0.01	0.01	0.01
13	0.00	0.00	0.00	0.00	0.00	0.00	*****	0.00	0.00	0.00	0.00	0.00
14	0.00	0.00	0.00	0.00	0.00	0.00	*****	0.00	0.00	0.00	0.00	0.0
15	0.03	0.02	0.02	0.01	0.01	0.00	*****	0.00	0.00	0.00	0.00	0.0
16	0.00	0.00	0.00	0.00	0.00	0.00	*****	0.01	0.00	0.00	0.00	0.0
17	0.00	0.00	0.00	0.00	0.00	0.01	*****	0.02	0.01	0.00	0.00	0.00
18	0.00	0.00	0.01	0.00	0.00	0.01	*****	0.01	0.01	0.02	0.05	0.0
19	0.00	0.00	0.00	0.00	0.00	0.01	*****	0.01	0.01	0.00	0.00	0.0
20	0.00	0.00	0.00	0.00	0.00	0.00	*****	0.00	0.00	0.00	0.00	0.0
21	0.00	0.00	0.00	0.00	0.00	0.00	*****	0.00	0.00	0.00	0.00	0.0
22	0.00	0.00	0.00	0.00	0.00	0.00	*****	0.00	0.00	0.00	0.00	0.00
23	0.01	0.01	0.01	0.02	0.02	0.02	*****	0.06	0.05	0.02	0.01	0.0
24	0.02	0.02	0.01	0.01	0.01	0.02	*****	0.09	0.03	0.03	0.04	0.0
25	0.04	0.05	0.03	0.02	0.03	0.05	*****	0.04	0.06	0.03	0.01	0.0
26	0.03	0.01	0.02	0.01	0.01	0.02	*****	0.04	0.04	0.03	0.02	0.01
27	0.03	0.02	0.02	0.02	0.02	0.03	*****	0.02	0.02	0.03	0.01	0.0
28	0.02	0.01	0.01	0.00	0.00	0.00	*****	0.01	0.01	0.01	0.01	0.0
29	0.03	0.06	0.05	0.05	0.04	0.03	*****	0.00	0.00	0.00	0.00	0.0
30	0.05	0.05	0.04	0.02	0.02	0.02	*****	0.02	0.02	0.01	0.01	0.01
31	0.06	0.06	0.06	0.06	0.05	0.06	*****	0.09	0.06	0.05	0.03	0.01

DAY	13	14	15	16	17	18	19	20	21	22	23	24
1	0.01	0.00	0.00	0.00	0.00	0.00	0.01	0.01	0.01	0.00	0.00	0.0
2	0.00	0.00	0.00	0.00	0.00	0.00	0.01	0.01	0.01	0.01	0.01	0.0
3	0.00	0.00	0.00	0.00	0.00	0.00	0.00	0.01	0.05	0.05	0.05	0.0
4	0.01	0.00	0.01	0.02	0.03	0.02	0.02	0.02	0.02	0.02	0.03	0.03
5	0.01	0.01	0.01	0.01	0.01	0.02	0.02	0.01	0.01	0.01	0.01	0.00
6	0.00	0.00	0.00	0.00	0.01	0.00	0.00	0.00	0.00	0.00	0.00	0.0
7	0.00	0.00	0.00	0.00	0.00	0.00	0.00	0.00	0.00	0.00	0.01	0.0
8	0.00	0.00	0.00	0.00	0.00	0.00	0.00	0.00	0.00	0.00	0.00	0.00
9	0.00	0.00	0.00	0.00	0.00	0.00	0.00	0.00	0.00	0.01	0.03	0.02
10	0.01	0.00	0.00	0.00	0.00	0.00	0.00	0.01	0.01	0.02	0.01	0.0
11	0.01	*****	0.01	0.01	0.01	0.01	0.01	0.01	0.02	0.02	0.02	0.0
12	0.01	0.01	0.01	0.01	0.01	0.01	0.01	0.01	0.01	0.01	0.01	0.0
13	*****	*****	*****	0.00	0.00	0.00	0.00	0.00	0.01	0.02	0.00	0.00
14	0.00	0.00	0.00	0.00	0.00	0.00	0.00	0.00	0.01	0.05	0.05	0.0
15	0.00	0.00	0.00	0.00	0.00	0.00	0.00	0.00	0.01	0.03	0.03	0.0
16	0.00	0.00	0.00	0.00	0.00	0.00	0.00	0.00	0.01	0.02	0.02	0.0
17	0.00	0.00	0.00	0.00	0.00	0.00	0.00	0.00	0.01	0.01	0.01	0.01
18	0.01	0.01	0.01	0.01	0.01	0.01	0.01	0.01	0.00	0.00	0.00	0.00
19	0.00	0.00	0.00	0.00	0.00	0.00	0.00	0.00	0.00	0.00	0.00	0.0
20	0.00	0.00	0.00	0.00	0.00	0.00	0.00	0.00	0.00	0.01	0.01	0.0
21	0.00	0.00	0.00	0.00	0.00	0.00	0.00	0.00	0.00	0.00	0.00	0.0
22	0.00	0.00	0.00	0.00	0.00	0.00	0.00	0.00	0.00	0.00	0.01	0.01
23	0.00	0.00	0.01	0.01	0.01	0.01	0.01	0.01	0.03	0.05	0.06	0.0
24	0.02	0.01	0.01	0.01	0.01	0.01	0.02	0.02	0.07	0.05	0.03	0.0
25	0.01	0.01	0.01	0.01	0.01	0.01	0.01	0.02	0.03	0.05	0.05	0.0
26	0.01	0.01	0.01	0.01	0.02	0.03	0.03	0.03	0.05	0.08	0.08	0.04
27	0.01	0.01	0.01	0.01	0.01	0.01	0.01	0.02	0.03	0.04	0.03	0.02
28	0.00	0.00	0.00	0.00	0.00	0.00	0.00	0.01	0.02	0.05	0.06	0.0
29	0.00	0.00	0.00	0.00	0.00	0.00	0.00	0.01	0.03	0.07	0.07	0.0
30	0.01	0.00	0.00	0.00	0.00	0.00	0.00	0.01	0.05	0.08	0.06	0.0
31	0.01	0.01	0.01	0.01	0.01	0.01	0.01	0.01	0.02	0.03	0.03	0.01

OXIDES OF NITROGEN - NOX S050

FREQUENCY DISTRIBUTION TABLES

MONTH JULY 84

PERCENT OF READINGS WITH WIND DIRECTION

WIND DIRECTION	POLLUTANT OCC. HOURS	FREQUENCY OF OCCURRENCE %
N	0	0.0
NE	0	0.0
E	0	0.0
SE	0	0.0
S	0	0.0
SW	0	0.0
W	0	0.0
NW	0	0.0
CALM	0	0.0
INOP	0	0.0

FREQUENCY OF READINGS WITH WIND DIRECTION

WIND DIRECTION	HOURS OF WIND OCCURRENCE	HOURS OF READINGS	FREQUENCY OF READINGS WITH WIND
N	39	0	0.0
NE	74	0	0.0
E	83	0	0.0
SE	56	0	0.0
S	66	0	0.0
SW	52	0	0.0
W	178	0	0.0
NW	124	0	0.0
CALM	37	0	0.0
INOP	0	0	0.0

NOTE.1. READINGS CONSIDERED IN FREQUENCY DISTRIBUTION TABLES ARE THOSE GREATER THAN 0.1000 PPM

2. VALUE OF ****** INDICATES NO DATA AVAILABLE OR INSUFFICIENT DATA

3. WIND DATA UTILIZED FOR CORRELATION PURPOSES WAS MONITORED AT ST ALBERT S050

OXIDES OF NITROGEN - NO S050

PPM ONE HOUR AVERAGE

MONTH JULY 84

DAY	0001-0800 AVE.	NO.	0801-1600 AVE.	NO.	1601-2400 AVE.	NO.	FULL DAY AVE.	NO.	DAILY PEAK
1	0.00	7	0.00	8	0.00	8	0.00	23	0.00
2	0.00	7	0.00	8	0.00	8	0.00	23	0.00
3	0.00	7	0.00	8	0.01	8	0.00	23	0.03
4	0.00	7	0.01	8	0.00	8	0.00	23	0.02
5	0.00	7	0.00	8	0.00	8	0.00	23	0.01
6	0.00	7	0.00	8	0.00	8	0.00	23	0.00
7	0.00	7	0.00	8	0.00	8	0.00	23	0.00
8	0.00	7	0.00	8	0.00	8	0.00	23	0.00
9	0.00	7	0.00	8	0.00	8	0.00	23	0.00
10	0.00	7	0.00	8	0.00	8	0.00	23	0.00
11	0.00	7	0.00	7	0.00	8	0.00	22	0.01
12	0.00	7	0.00	8	0.00	8	0.00	23	0.00
13	0.00	7	0.00	5	0.00	8	0.00	20	0.00
14	0.00	7	0.00	8	0.01	8	0.00	23	0.03
15	0.00	7	0.00	8	0.00	8	0.00	23	0.01
16	0.00	7	0.00	8	0.00	8	0.00	23	0.00
17	0.00	7	0.00	8	0.00	8	0.00	23	0.01
18	0.00	7	0.01	8	0.00	8	0.00	23	0.02
19	0.00	7	0.00	8	0.00	8	0.00	23	0.00
20	0.00	7	0.00	8	0.00	8	0.00	23	0.00
21	0.00	7	0.00	8	0.00	8	0.00	23	0.00
22	0.00	7	0.00	8	0.00	8	0.00	23	0.00
23	0.01	7	0.01	8	0.00	8	0.01	23	0.04
24	0.01	7	0.01	8	0.01	8	0.01	23	0.07
25	0.01	7	0.00	8	0.00	8	0.00	23	0.02
26	0.00	7	0.00	8	0.01	8	0.00	23	0.02
27	0.00	7	0.00	8	0.00	8	0.00	23	0.01
28	0.00	7	0.00	8	0.01	8	0.00	23	0.03
29	0.02	7	0.00	8	0.01	8	0.01	23	0.04
30	0.01	7	0.00	8	0.01	8	0.01	23	0.04
31	0.02	7	0.00	8	0.00	8	0.01	23	0.05

SUMMARY OF PEAK READINGS, PEAK AVERAGES, MONTHLY STATS

PEAK HOURLY READING 0.07 ON DAY 24 701 - 800 HOURS

WIND READINGS HOUR BEFORE/DURING /AFTER PEAK HOURLY READING

SW 7 / S 7 / SW 7

PEAK CALENDAR DAY AVG. 0.01 ON DAY 31

ARITHMETIC MEAN 0.00 NO. RDGS. 709 HRS. (%OPER. 95.30%)

POLLUTANT NOT SPECIFIED IN THE CLEAN AIR (MAXIMUM LEVELS) REGULATIONS

FREQUENCY DISTRIBUTION

RANGE	NO.OF RDGS.	PERCENT	CUMULATIVE
0.0 - 0.000	620	87.4	87.4
0.001 - 0.110	89	12.6	100.0
0.111 - 0.210	0	0.0	100.0
0.211 - 0.420	0	0.0	100.0
0.421 OR OVER	0	0.0	100.0

ALL MEANS ARE ARITHMETIC UNLESS OTHERWISE SPECIFIED

OXIDES OF NITROGEN - NO S050

PPM ONE HOUR AVERAGE

MONTH JULY 84

DAY	1	2	3	4	5	6	7	8	9	10	11	12
1	0.00	0.00	0.00	0.00	0.00	0.00	*****	0.00	0.00	0.00	0.00	0.00
2	0.00	0.00	0.00	0.00	0.00	0.00	*****	0.00	0.00	0.00	0.00	0.00
3	0.00	0.00	0.00	0.00	0.00	0.00	*****	0.00	0.00	0.00	0.00	0.00
4	0.00	0.00	0.00	0.00	0.00	0.01	*****	0.01	0.02	0.02	0.01	0.00
5	0.00	0.00	0.00	0.00	0.00	0.01	*****	0.01	0.01	0.01	0.00	0.00
6	0.00	0.00	0.00	0.00	0.00	0.00	*****	0.00	0.00	0.00	0.00	0.00
7	0.00	0.00	0.00	0.00	0.00	0.00	*****	0.00	0.00	0.00	0.00	0.00
8	0.00	0.00	0.00	0.00	0.00	0.00	*****	0.00	0.00	0.00	0.00	0.00
9	0.00	0.00	0.00	0.00	0.00	0.00	*****	0.00	0.00	0.00	0.00	0.00
10	0.00	0.00	0.00	0.00	0.00	0.00	*****	0.00	0.00	0.00	0.00	0.00
11	0.00	0.00	0.00	0.00	0.00	0.00	*****	0.00	0.01	0.01	0.00	0.00
12	0.00	0.00	0.00	0.00	0.00	0.00	*****	0.00	0.00	0.00	0.00	0.00
13	0.00	0.00	0.00	0.00	0.00	0.00	*****	0.00	0.00	0.00	0.00	0.00
14	0.00	0.00	0.00	0.00	0.00	0.00	*****	0.00	0.00	0.00	0.00	0.00
15	0.00	0.00	0.00	0.00	0.00	0.00	*****	0.00	0.00	0.00	0.00	0.00
16	0.00	0.00	0.00	0.00	0.00	0.00	*****	0.00	0.00	0.00	0.00	0.00
17	0.00	0.00	0.00	0.00	0.00	0.00	*****	0.01	0.00	0.00	0.00	0.00
18	0.00	0.00	0.00	0.00	0.00	0.00	*****	0.00	0.00	0.01	0.02	0.00
19	0.00	0.00	0.00	0.00	0.00	0.00	*****	0.00	0.00	0.00	0.00	0.00
20	0.00	0.00	0.00	0.00	0.00	0.00	*****	0.00	0.00	0.00	0.00	0.00
21	0.00	0.00	0.00	0.00	0.00	0.00	*****	0.00	0.00	0.00	0.00	0.00
22	0.00	0.00	0.00	0.00	0.00	0.00	*****	0.00	0.00	0.00	0.00	0.00
23	0.00	0.00	0.00	0.00	0.01	0.01	*****	0.04	0.03	0.01	0.00	0.00
24	0.00	0.00	0.00	0.00	0.00	0.00	*****	0.07	0.01	0.01	0.01	0.00
25	0.01	0.01	0.00	0.00	0.01	0.02	*****	0.01	0.02	0.00	0.00	0.00
26	0.00	0.00	0.00	0.00	0.00	0.00	*****	0.01	0.01	0.01	0.01	0.00
27	0.01	0.00	0.00	0.00	0.00	0.01	*****	0.01	0.01	0.01	0.00	0.00
28	0.00	0.00	0.00	0.00	0.00	0.00	*****	0.00	0.00	0.00	0.00	0.00
29	0.01	0.04	0.02	0.02	0.02	0.02	*****	0.00	0.00	0.00	0.00	0.00
30	0.01	0.02	0.01	0.00	0.01	0.01	*****	0.01	0.00	0.00	0.00	0.00
31	0.01	0.02	0.02	0.02	0.02	0.03	*****	0.05	0.02	0.01	0.00	0.00

DAY	13	14	15	16	17	18	19	20	21	22	23	24
1	0.00	0.00	0.00	0.00	0.00	0.00	0.00	0.00	0.00	0.00	0.00	0.00
2	0.00	0.00	0.00	0.00	0.00	0.00	0.00	0.00	0.00	0.00	0.00	0.00
3	0.00	0.00	0.00	0.00	0.00	0.00	0.00	0.00	0.03	0.01	0.02	0.00
4	0.00	0.00	0.00	0.00	0.00	0.00	0.00	0.00	0.00	0.00	0.01	0.00
5	0.00	0.00	0.00	0.00	0.00	0.00	0.00	0.00	0.00	0.00	0.00	0.00
6	0.00	0.00	0.00	0.00	0.00	0.00	0.00	0.00	0.00	0.00	0.00	0.00
7	0.00	0.00	0.00	0.00	0.00	0.00	0.00	0.00	0.00	0.00	0.00	0.00
8	0.00	0.00	0.00	0.00	0.00	0.00	0.00	0.00	0.00	0.00	0.00	0.00
9	0.00	0.00	0.00	0.00	0.00	0.00	0.00	0.00	0.00	0.00	0.00	0.00
10	0.00	0.00	0.00	0.00	0.00	0.00	0.00	0.00	0.00	0.00	0.00	0.00
11	0.00	*****	0.00	0.00	0.00	0.00	0.00	0.00	0.00	0.00	0.00	0.00
12	0.00	0.00	0.00	0.00	0.00	0.00	0.00	0.00	0.00	0.00	0.00	0.00
13	*****	*****	*****	0.00	0.00	0.00	0.00	0.00	0.00	0.00	0.00	0.00
14	0.00	0.00	0.00	0.00	0.00	0.00	0.00	0.00	0.00	0.03	0.03	0.00
15	0.00	0.00	0.00	0.00	0.00	0.00	0.00	0.00	0.00	0.01	0.00	0.00
16	0.00	0.00	0.00	0.00	0.00	0.00	0.00	0.00	0.00	0.00	0.00	0.00
17	0.00	0.00	0.00	0.00	0.00	0.00	0.00	0.00	0.00	0.00	0.00	0.00
18	0.00	0.00	0.00	0.00	0.00	0.00	0.00	0.00	0.00	0.00	0.00	0.00
19	0.00	0.00	0.00	0.00	0.00	0.00	0.00	0.00	0.00	0.00	0.00	0.00
20	0.00	0.00	0.00	0.00	0.00	0.00	0.00	0.00	0.00	0.00	0.00	0.00
21	0.00	0.00	0.00	0.00	0.00	0.00	0.00	0.00	0.00	0.00	0.00	0.00
22	0.00	0.00	0.00	0.00	0.00	0.00	0.00	0.00	0.00	0.00	0.00	0.00
23	0.00	0.00	0.00	0.00	0.00	0.00	0.00	0.00	0.00	0.00	0.01	0.00
24	0.00	0.00	0.00	0.00	0.00	0.00	0.00	0.00	0.03	0.02	0.00	0.00
25	0.00	0.00	0.00	0.00	0.00	0.00	0.00	0.00	0.00	0.00	0.00	0.00
26	0.00	0.00	0.00	0.00	0.00	0.00	0.00	0.00	0.00	0.02	0.02	0.00
27	0.00	0.00	0.00	0.00	0.00	0.00	0.00	0.00	0.00	0.01	0.01	0.00
28	0.00	0.00	0.00	0.00	0.00	0.00	0.00	0.00	0.00	0.02	0.02	0.00
29	0.00	0.00	0.00	0.00	0.00	0.00	0.00	0.00	0.01	0.03	0.02	0.00
30	0.00	0.00	0.00	0.00	0.00	0.00	0.00	0.00	0.01	0.04	0.01	0.00
31	0.00	0.00	0.00	0.00	0.00	0.00	0.00	0.00	0.00	0.00	0.00	0.00

OXIDES OF NITROGEN - NO S050

FREQUENCY DISTRIBUTION TABLES

MONTH JULY 84

PERCENT OF READINGS WITH WIND DIRECTION

WIND DIRECTION	POLLUTANT OCC. HOURS	FREQUENCY OF OCCURRENCE %
N	0	0.0
NE	0	0.0
E	0	0.0
SE	0	0.0
S	0	0.0
SW	0	0.0
W	0	0.0
NW	0	0.0
CALM	0	0.0
INOP	0	0.0

FREQUENCY OF READINGS WITH WIND DIRECTION

WIND DIRECTION	HOURS OF WIND OCCURRENCE	HOURS OF READINGS	FREQUENCY OF READINGS WITH WIND
N	39	0	0.0
NE	74	0	0.0
E	83	0	0.0
SE	56	0	0.0
S	66	0	0.0
SW	52	0	0.0
W	178	0	0.0
NW	124	0	0.0
CALM	37	0	0.0
INOP	0	0	0.0

NOTE.1. READINGS CONSIDERED IN FREQUENCY DISTRIBUTION TABLES ARE THOSE GREATER THAN 0.1000 PPM

2. VALUE OF ****** INDICATES NO DATA AVAILABLE OR INSUFFICIENT DATA

3. WIND DATA UTILIZED FOR CORRELATION PURPOSES WAS MONITORED AT ST ALBERT S050

OXIDES OF NITROGEN - NO2 S050

PPM ONE HOUR AVERAGE

MONTH JULY 84

DAY	0001-0800 AVE.	NO.	0801-1600 AVE.	NO.	1601-2400 AVE.	NO.	FULL DAY AVE.	NO.	DAILY PEAK
1	0.00	7	0.01	8	0.00	8	0.00	23	0.01
2	0.00	7	0.00	8	0.01	8	0.00	23	0.01
3	0.00	7	0.00	8	0.02	8	0.01	23	0.04
4	0.01	7	0.01	8	0.02	8	0.02	23	0.03
5	0.01	7	0.01	8	0.01	8	0.01	23	0.02
6	0.00	7	0.00	8	0.00	8	0.00	23	0.01
7	0.00	7	0.00	8	0.00	8	0.00	23	0.01
8	0.00	7	0.00	8	0.00	8	0.00	23	0.00
9	0.00	7	0.00	8	0.01	8	0.00	23	0.03
10	0.01	7	0.01	8	0.01	8	0.01	23	0.02
11	0.00	7	0.01	7	0.01	8	0.01	22	0.02
12	0.01	7	0.01	8	0.01	8	0.01	23	0.02
13	0.00	7	0.00	5	0.00	8	0.00	20	0.02
14	0.00	7	0.00	8	0.01	8	0.00	23	0.02
15	0.01	7	0.00	8	0.01	8	0.01	23	0.03
16	0.00	7	0.00	8	0.01	8	0.00	23	0.02
17	0.00	7	0.00	8	0.00	8	0.00	23	0.01
18	0.00	7	0.01	8	0.00	8	0.01	23	0.03
19	0.00	7	0.00	8	0.00	8	0.00	23	0.01
20	0.00	7	0.00	8	0.00	8	0.00	23	0.01
21	0.00	7	0.00	8	0.00	8	0.00	23	0.00
22	0.00	7	0.00	8	0.00	8	0.00	23	0.01
23	0.01	7	0.01	8	0.03	8	0.02	23	0.05
24	0.02	7	0.02	8	0.03	8	0.02	23	0.04
25	0.03	7	0.02	8	0.03	8	0.02	23	0.05
26	0.02	7	0.01	8	0.04	8	0.02	23	0.06
27	0.02	7	0.01	8	0.02	8	0.02	23	0.03
28	0.01	7	0.00	8	0.02	8	0.01	23	0.04
29	0.02	7	0.00	8	0.02	8	0.01	23	0.05
30	0.02	7	0.01	8	0.02	8	0.02	23	0.05
31	0.04	7	0.02	8	0.02	8	0.02	23	0.05

SUMMARY OF PEAK READINGS, PEAK AVERAGES, MONTHLY STATS

PEAK HOURLY READING 0.06 ON DAY 26 2101 - 2200 HOURS

WIND READINGS HOUR BEFORE/DURING /AFTER PEAK HOURLY READING

SE 3 / SE 7 / S 3

PEAK CALENDAR DAY AVG. 0.02 ON DAY 31

ARITHMETIC MEAN 0.01 NO. RDGS. 709 HRS. (%OPER. 95.30%)

COMPARISON TO CLEAN AIR (MAXIMUM LEVELS) REGULATION

REGULATIONS		NO.IN EXCESS OF REGULATION	% OF TIME PER MONTH THAT REG. WAS EXCEEDED
1-HOUR	0.21	0	0.0
24-HOUR	0.11	0	0.0

COMPARISON TO 24-HOUR REGULATION WAS ON A CALENDAR DAY BASIS ONLY

FREQUENCY DISTRIBUTION

RANGE	NO.OF RDGS.	PERCENT	CUMULATIVE
0.0 - 0.000	343	48.4	48.4
0.001 - 0.110	366	51.6	100.0
0.111 - 0.210	0	0.0	100.0
0.211 - 0.420	0	0.0	100.0
0.421 OR OVER	0	0.0	100.0

ALL MEANS ARE ARITHMETIC UNLESS OTHERWISE SPECIFIED

OXIDES OF NITROGEN - NO2 S050

PPM ONE HOUR AVERAGE

MONTH JULY 84

DAY	1	2	3	4	5	6	7	8	9	10	11	12
1	0.00	0.00	0.00	0.00	0.00	0.00	*****	0.01	0.01	0.01	0.01	0.0
2	0.00	0.00	0.00	0.00	0.00	0.00	*****	0.00	0.00	0.00	0.00	0.0
3	0.00	0.00	0.00	0.00	0.01	0.01	*****	0.00	0.00	0.00	0.00	0.0
4	0.02	0.02	0.01	0.01	0.01	0.01	*****	0.02	0.02	0.02	0.01	0.01
5	0.02	0.02	0.01	0.01	0.01	0.01	*****	0.02	0.01	0.01	0.01	0.0
6	0.00	0.00	0.00	0.00	0.00	0.00	*****	0.00	0.00	0.01	0.00	0.0
7	0.00	0.00	0.00	0.00	0.00	0.00	*****	0.00	0.00	0.00	0.01	0.0
8	0.00	0.00	0.00	0.00	0.00	0.00	*****	0.00	0.00	0.00	0.00	0.0
9	0.00	0.00	0.00	0.00	0.00	0.00	*****	0.00	0.00	0.00	0.00	0.0
10	0.02	0.02	0.02	0.01	0.01	0.01	*****	0.01	0.01	0.01	0.01	0.0
11	0.00	0.00	0.00	0.00	0.00	0.01	*****	0.01	0.01	0.01	0.01	0.0
12	0.01	0.02	0.01	0.01	0.01	0.01	*****	0.01	0.01	0.01	0.01	0.0
13	0.00	0.00	0.00	0.00	0.00	0.00	*****	0.00	0.00	0.00	0.00	0.00
14	0.00	0.00	0.00	0.00	0.00	0.00	*****	0.00	0.00	0.00	0.00	0.0
15	0.03	0.02	0.02	0.01	0.01	0.00	*****	0.00	0.00	0.00	0.00	0.0
16	0.00	0.00	0.00	0.00	0.00	0.00	*****	0.01	0.00	0.00	0.00	0.0
17	0.00	0.00	0.00	0.00	0.00	0.01	*****	0.01	0.01	0.00	0.00	0.00
18	0.00	0.00	0.01	0.00	0.00	0.01	*****	0.01	0.01	0.01	0.03	0.0
19	0.00	0.00	0.00	0.00	0.00	0.01	*****	0.01	0.01	0.00	0.00	0.0
20	0.00	0.00	0.00	0.00	0.00	0.00	*****	0.00	0.00	0.00	0.00	0.0
21	0.00	0.00	0.00	0.00	0.00	0.00	*****	0.00	0.00	0.00	0.00	0.0
22	0.00	0.00	0.00	0.00	0.00	0.00	*****	0.00	0.00	0.00	0.00	0.00
23	0.01	0.01	0.01	0.02	0.01	0.01	*****	0.02	0.02	0.01	0.01	0.0
24	0.02	0.02	0.01	0.01	0.01	0.02	*****	0.02	0.02	0.02	0.03	0.0
25	0.03	0.04	0.03	0.02	0.02	0.03	*****	0.03	0.04	0.03	0.01	0.0
26	0.03	0.01	0.02	0.01	0.01	0.02	*****	0.03	0.03	0.02	0.01	0.01
27	0.02	0.02	0.02	0.02	0.02	0.02	*****	0.01	0.01	0.02	0.01	0.0
28	0.02	0.01	0.01	0.00	0.00	0.00	*****	0.01	0.01	0.01	0.01	0.0
29	0.02	0.02	0.03	0.03	0.02	0.01	*****	0.00	0.00	0.00	0.00	0.0
30	0.04	0.03	0.03	0.02	0.01	0.01	*****	0.01	0.02	0.01	0.01	0.01
31	0.05	0.04	0.04	0.04	0.03	0.03	*****	0.04	0.04	0.04	0.03	0.01

DAY	13	14	15	16	17	18	19	20	21	22	23	24
1	0.01	0.00	0.00	0.00	0.00	0.00	0.01	0.01	0.01	0.00	0.00	0.0
2	0.00	0.00	0.00	0.00	0.00	0.00	0.01	0.01	0.01	0.01	0.01	0.0
3	0.00	0.00	0.00	0.00	0.00	0.00	0.00	0.01	0.02	0.04	0.03	0.0
4	0.01	0.00	0.01	0.02	0.03	0.02	0.02	0.02	0.02	0.02	0.02	0.02
5	0.01	0.01	0.01	0.01	0.01	0.02	0.02	0.01	0.01	0.01	0.01	0.00
6	0.00	0.00	0.00	0.00	0.01	0.00	0.00	0.00	0.00	0.00	0.00	0.0
7	0.00	0.00	0.00	0.00	0.00	0.00	0.00	0.00	0.00	0.00	0.01	0.0
8	0.00	0.00	0.00	0.00	0.00	0.00	0.00	0.00	0.00	0.00	0.00	0.0
9	0.00	0.00	0.00	0.00	0.00	0.00	0.00	0.00	0.00	0.01	0.03	0.02
10	0.01	0.00	0.00	0.00	0.00	0.00	0.00	0.01	0.01	0.02	0.01	0.0
11	0.01	*****	0.01	0.01	0.01	0.01	0.01	0.01	0.02	0.02	0.02	0.0
12	0.01	0.01	0.01	0.01	0.01	0.01	0.01	0.01	0.01	0.01	0.01	0.0
13	*****	*****	*****	0.00	0.00	0.00	0.00	0.00	0.01	0.02	0.00	0.00
14	0.00	0.00	0.00	0.00	0.00	0.00	0.00	0.00	0.01	0.02	0.02	0.02
15	0.00	0.00	0.00	0.00	0.00	0.00	0.00	0.00	0.01	0.02	0.03	0.0
16	0.00	0.00	0.00	0.00	0.00	0.00	0.00	0.00	0.01	0.02	0.02	0.0
17	0.00	0.00	0.00	0.00	0.00	0.00	0.00	0.00	0.01	0.01	0.01	0.01
18	0.01	0.01	0.01	0.01	0.01	0.01	0.01	0.01	0.00	0.00	0.00	0.00
19	0.00	0.00	0.00	0.00	0.00	0.00	0.00	0.00	0.00	0.00	0.00	0.0
20	0.00	0.00	0.00	0.00	0.00	0.00	0.00	0.00	0.00	0.01	0.01	0.0
21	0.00	0.00	0.00	0.00	0.00	0.00	0.00	0.00	0.00	0.00	0.00	0.0
22	0.00	0.00	0.00	0.00	0.00	0.00	0.00	0.00	0.00	0.00	0.01	0.01
23	0.00	0.00	0.01	0.01	0.01	0.01	0.01	0.01	0.03	0.05	0.05	0.0
24	0.02	0.01	0.01	0.01	0.01	0.01	0.02	0.02	0.04	0.03	0.03	0.0
25	0.01	0.01	0.01	0.01	0.01	0.01	0.01	0.02	0.03	0.05	0.05	0.0
26	0.01	0.01	0.01	0.01	0.02	0.03	0.03	0.03	0.05	0.06	0.06	0.04
27	0.01	0.01	0.01	0.01	0.01	0.01	0.01	0.02	0.03	0.03	0.02	0.02
28	0.00	0.00	0.00	0.00	0.00	0.00	0.00	0.01	0.02	0.03	0.04	0.0
29	0.00	0.00	0.00	0.00	0.00	0.00	0.00	0.01	0.02	0.04	0.05	0.0
30	0.01	0.00	0.00	0.00	0.00	0.00	0.00	0.01	0.04	0.04	0.05	0.0
31	0.01	0.01	0.01	0.01	0.01	0.01	0.01	0.01	0.02	0.03	0.03	0.01

OXIDES OF NITROGEN - NO2 S050

FREQUENCY DISTRIBUTION TABLES

MONTH JULY 84

PERCENT OF READINGS WITH WIND DIRECTION

WIND DIRECTION	POLLUTANT OCC. HOURS	FREQUENCY OF OCCURRENCE %
N	0	0.0
NE	0	0.0
E	0	0.0
SE	1	50.0
S	1	50.0
SW	0	0.0
W	0	0.0
NW	0	0.0
CALM	0	0.0
INOP	0	0.0

FREQUENCY OF READINGS WITH WIND DIRECTION

WIND DIRECTION	HOURS OF WIND OCCURRENCE	HOURS OF READINGS	FREQUENCY OF READINGS WITH WIND
N	39	0	0.0
NE	74	0	0.0
E	83	0	0.0
SE	56	1	1.8
S	66	1	1.5
SW	52	0	0.0
W	178	0	0.0
NW	124	0	0.0
CALM	37	0	0.0
INOP	0	0	0.0

NOTE.1. READINGS CONSIDERED IN FREQUENCY DISTRIBUTION TABLES ARE THOSE GREATER THAN 0.0600 PPM

2. VALUE OF ****** INDICATES NO DATA AVAILABLE OR INSUFFICIENT DATA

3. WIND DATA UTILIZED FOR CORRELATION PURPOSES WAS MONITORED AT ST ALBERT S050

SULFUR DIOXIDE S050

PPM ONE HOUR AVERAGE

MONTH JULY 84

DAY	0001-0800 AVE.	NO.	0801-1600 AVE.	NO.	1601-2400 AVE.	NO.	FULL DAY AVE.	NO.	DAILY PEAK
1	0.00	7	0.00	8	0.00	8	0.00	23	0.00
2	0.00	7	0.00	8	0.00	8	0.00	23	0.00
3	0.00	7	0.00	8	0.0	0	0.00	15	0.00
4	0.0	0	0.00	5	0.00	8	0.00	13	0.00
5	0.00	7	0.00	8	0.00	8	0.00	23	0.00
6	0.00	7	0.00	8	0.00	8	0.00	23	0.00
7	0.00	7	0.00	8	0.00	8	0.00	23	0.00
8	0.00	7	0.00	8	0.00	8	0.00	23	0.00
9	0.00	7	0.00	8	0.00	8	0.00	23	0.00
10	0.00	7	0.00	8	0.00	8	0.00	23	0.00
11	0.00	7	0.00	8	0.00	8	0.00	23	0.01
12	0.00	7	0.00	8	0.00	8	0.00	23	0.00
13	0.00	7	0.00	6	0.00	8	0.00	21	0.00
14	0.00	7	0.00	8	0.00	8	0.00	23	0.00
15	0.00	7	0.00	8	0.00	8	0.00	23	0.00
16	0.00	7	0.00	8	0.00	8	0.00	23	0.00
17	0.00	7	0.00	8	0.00	8	0.00	23	0.00
18	0.00	7	0.00	8	0.00	8	0.00	23	0.01
19	0.00	7	0.00	8	0.00	8	0.00	23	0.00
20	0.00	7	0.00	8	0.00	8	0.00	23	0.00
21	0.00	7	0.00	8	0.00	8	0.00	23	0.00
22	0.00	7	0.00	8	0.00	8	0.00	23	0.00
23	0.00	7	0.00	8	0.00	8	0.00	23	0.00
24	0.00	7	0.00	8	0.00	8	0.00	23	0.01
25	0.00	7	0.00	8	0.00	8	0.00	23	0.00
26	0.00	7	0.00	8	0.00	8	0.00	23	0.00
27	0.00	7	0.00	8	0.00	8	0.00	23	0.00
28	0.00	7	0.00	8	0.00	8	0.00	23	0.00
29	0.00	7	0.00	8	0.00	8	0.00	23	0.00
30	0.00	7	0.00	8	0.00	8	0.00	23	0.00
31	0.00	7	0.00	8	0.00	8	0.00	23	0.00

SUMMARY OF PEAK READINGS, PEAK AVERAGES, MONTHLY STATS

PEAK HOURLY READING 0.01 ON DAY 11 901 - 1000 HOURS

WIND READINGS HOUR BEFORE/DURING /AFTER PEAK HOURLY READING

C 0 / S 3 / SE 3

PEAK CALENDAR DAY AVG. 0.00 ON DAY 18

ARITHMETIC MEAN 0.00 NO. RDGS. 693 HRS. (%OPER. 93.15%)

COMPARISON TO CLEAN AIR (MAXIMUM LEVELS) REGULATION

	REGULATIONS	NO.IN EXCESS OF REGULATION	% OF TIME PER MONTH THAT REG. WAS EXCEEDED
1-HOUR	0.17	0	0.0
24-HOUR	0.06	0	0.0

COMPARISON TO 24-HOUR REGULATION WAS ON A CALENDAR DAY BASIS ONLY

FREQUENCY DISTRIBUTION

RANGE	NO.OF RDGS.	PERCENT	CUMULATIVE
0.0 - 0.000	690	99.6	99.6
0.001 - 0.060	3	0.4	100.0
0.061 - 0.170	0	0.0	100.0
0.171 - 0.340	0	0.0	100.0
0.341 OR OVER	0	0.0	100.0

ALL MEANS ARE ARITHMETIC UNLESS OTHERWISE SPECIFIED

SULFUR DIOXIDE S050

PPM ONE HOUR AVERAGE

MONTH JULY 84

DAY	1	2	3	4	5	6	7	8	9	10	11	12
1	0.00	0.00	0.00	0.00	0.00	0.00	*****	0.00	0.00	0.00	0.00	0.00
2	0.00	0.00	0.00	0.00	0.00	0.00	*****	0.00	0.00	0.00	0.00	0.00
3	0.00	0.00	0.00	0.00	0.00	0.00	*****	0.00	0.00	0.00	0.00	0.00
4	*****	*****	*****	*****	*****	*****	*****	*****	*****	*****	*****	0.00
5	0.00	0.00	0.00	0.00	0.00	0.00	*****	0.00	0.00	0.00	0.00	0.00
6	0.00	0.00	0.00	0.00	0.00	0.00	*****	0.00	0.00	0.00	0.00	0.00
7	0.00	0.00	0.00	0.00	0.00	0.00	*****	0.00	0.00	0.00	0.00	0.00
8	0.00	0.00	0.00	0.00	0.00	0.00	*****	0.00	0.00	0.00	0.00	0.00
9	0.00	0.00	0.00	0.00	0.00	0.00	*****	0.00	0.00	0.00	0.00	0.00
10	0.00	0.00	0.00	0.00	0.00	0.00	*****	0.00	0.00	0.00	0.00	0.00
11	0.00	0.00	0.00	0.00	0.00	0.00	*****	0.00	0.00	0.01	0.00	0.00
12	0.00	0.00	0.00	0.00	0.00	0.00	*****	0.00	0.00	0.00	0.00	0.00
13	0.00	0.00	0.00	0.00	0.00	0.00	*****	0.00	0.00	0.00	*****	*****
14	0.00	0.00	0.00	0.00	0.00	0.00	*****	0.00	0.00	0.00	0.00	0.00
15	0.00	0.00	0.00	0.00	0.00	0.00	*****	0.00	0.00	0.00	0.00	0.00
16	0.00	0.00	0.00	0.00	0.00	0.00	*****	0.00	0.00	0.00	0.00	0.00
17	0.00	0.00	0.00	0.00	0.00	0.00	*****	0.00	0.00	0.00	0.00	0.00
18	0.00	0.00	0.00	0.00	0.00	0.00	*****	0.00	0.00	0.00	0.01	0.00
19	0.00	0.00	0.00	0.00	0.00	0.00	*****	0.00	0.00	0.00	0.00	0.00
20	0.00	0.00	0.00	0.00	0.00	0.00	*****	0.00	0.00	0.00	0.00	0.00
21	0.00	0.00	0.00	0.00	0.00	0.00	*****	0.00	0.00	0.00	0.00	0.00
22	0.00	0.00	0.00	0.00	0.00	0.00	*****	0.00	0.00	0.00	0.00	0.00
23	0.00	0.00	0.00	0.00	0.00	0.00	*****	0.00	0.00	0.00	0.00	0.00
24	0.00	0.00	0.00	0.00	0.00	0.00	*****	0.01	0.00	0.00	0.00	0.00
25	0.00	0.00	0.00	0.00	0.00	0.00	*****	0.00	0.00	0.00	0.00	0.00
26	0.00	0.00	0.00	0.00	0.00	0.00	*****	0.00	0.00	0.00	0.00	0.00
27	0.00	0.00	0.00	0.00	0.00	0.00	*****	0.00	0.00	0.00	0.00	0.00
28	0.00	0.00	0.00	0.00	0.00	0.00	*****	0.00	0.00	0.00	0.00	0.00
29	0.00	0.00	0.00	0.00	0.00	0.00	*****	0.00	0.00	0.00	0.00	0.00
30	0.00	0.00	0.00	0.00	0.00	0.00	*****	0.00	0.00	0.00	0.00	0.00
31	0.00	0.00	0.00	0.00	0.00	0.00	*****	0.00	0.00	0.00	0.00	0.00

DAY	13	14	15	16	17	18	19	20	21	22	23	24
1	0.00	0.00	0.00	0.00	0.00	0.00	0.00	0.00	0.00	0.00	0.00	0.0
2	0.00	0.00	0.00	0.00	0.00	0.00	0.00	0.00	0.00	0.00	0.00	0.0
3	0.00	0.00	0.00	0.00	*****	*****	*****	*****	*****	*****	*****	*****
4	0.00	0.00	0.00	0.00	0.00	0.00	0.00	0.00	0.00	0.00	0.00	0.0
5	0.00	0.00	0.00	0.00	0.00	0.00	0.00	0.00	0.00	0.00	0.00	0.0
6	0.00	0.00	0.00	0.00	0.00	0.00	0.00	0.00	0.00	0.00	0.00	0.0
7	0.00	0.00	0.00	0.00	0.00	0.00	0.00	0.00	0.00	0.00	0.00	0.0
8	0.00	0.00	0.00	0.00	0.00	0.00	0.00	0.00	0.00	0.00	0.00	0.0
9	0.00	0.00	0.00	0.00	0.00	0.00	0.00	0.00	0.00	0.00	0.00	0.0
10	0.00	0.00	0.00	0.00	0.00	0.00	0.00	0.00	0.00	0.00	0.00	0.0
11	0.00	0.00	0.00	0.00	0.00	0.00	0.00	0.00	0.00	0.00	0.00	0.0
12	0.00	0.00	0.00	0.00	0.00	0.00	0.00	0.00	0.00	0.00	0.00	0.0
13	0.00	0.00	0.00	0.00	0.00	0.00	0.00	0.00	0.00	0.00	0.00	0.0
14	0.00	0.00	0.00	0.00	0.00	0.00	0.00	0.00	0.00	0.00	0.00	0.0
15	0.00	0.00	0.00	0.00	0.00	0.00	0.00	0.00	0.00	0.00	0.00	0.0
16	0.00	0.00	0.00	0.00	0.00	0.00	0.00	0.00	0.00	0.00	0.00	0.0
17	0.00	0.00	0.00	0.00	0.00	0.00	0.00	0.00	0.00	0.00	0.00	0.0
18	0.00	0.00	0.00	0.00	0.00	0.00	0.00	0.00	0.00	0.00	0.00	0.0
19	0.00	0.00	0.00	0.00	0.00	0.00	0.00	0.00	0.00	0.00	0.00	0.0
20	0.00	0.00	0.00	0.00	0.00	0.00	0.00	0.00	0.00	0.00	0.00	0.0
21	0.00	0.00	0.00	0.00	0.00	0.00	0.00	0.00	0.00	0.00	0.00	0.0
22	0.00	0.00	0.00	0.00	0.00	0.00	0.00	0.00	0.00	0.00	0.00	0.0
23	0.00	0.00	0.00	0.00	0.00	0.00	0.00	0.00	0.00	0.00	0.00	0.0
24	0.00	0.00	0.00	0.00	0.00	0.00	0.00	0.00	0.00	0.00	0.00	0.0
25	0.00	0.00	0.00	0.00	0.00	0.00	0.00	0.00	0.00	0.00	0.00	0.0
26	0.00	0.00	0.00	0.00	0.00	0.00	0.00	0.00	0.00	0.00	0.00	0.0
27	0.00	0.00	0.00	0.00	0.00	0.00	0.00	0.00	0.00	0.00	0.00	0.0
28	0.00	0.00	0.00	0.00	0.00	0.00	0.00	0.00	0.00	0.00	0.00	0.0
29	0.00	0.00	0.00	0.00	0.00	0.00	0.00	0.00	0.00	0.00	0.00	0.0
30	0.00	0.00	0.00	0.00	0.00	0.00	0.00	0.00	0.00	0.00	0.00	0.0
31	0.00	0.00	0.00	0.00	0.00	0.00	0.00	0.00	0.00	0.00	0.00	0.0

SULFUR DIOXIDE S050

FREQUENCY DISTRIBUTION TABLES

MONTH JULY 84

PERCENT OF READINGS WITH WIND DIRECTION

WIND DIRECTION	POLLUTANT OCC. HOURS	FREQUENCY OF OCCURRENCE %
N	0	0.0
NE	0	0.0
E	0	0.0
SE	1	33.3
S	2	66.7
SW	0	0.0
W	0	0.0
NW	0	0.0
CALM	0	0.0
INOP	0	0.0

FREQUENCY OF READINGS WITH WIND DIRECTION

WIND DIRECTION	HOURS OF WIND OCCURRENCE	HOURS OF READINGS	FREQUENCY OF READINGS WITH WIND
N	39	0	0.0
NE	73	0	0.0
E	72	0	0.0
SE	55	1	1.8
S	66	2	3.0
SW	52	0	0.0
W	180	0	0.0
NW	119	0	0.0
CALM	37	0	0.0
INOP	0	0	0.0

NOTE.1. READINGS CONSIDERED IN FREQUENCY DISTRIBUTION TABLES ARE THOSE GREATER THAN 0.0001 PPM

2. VALUE OF ****** INDICATES NO DATA AVAILABLE OR INSUFFICIENT DATA

3. WIND DATA UTILIZED FOR CORRELATION PURPOSES WAS MONITORED AT ST ALBERT S050

HYDROGEN SULFIDE (H2S) S050

PPB ONE HOUR AVERAGE

MONTH JULY 84

DAY	0001-0800 AVE.	NO.	0801-1600 AVE.	NO.	1601-2400 AVE.	NO.	FULL DAY AVE.	NO.	DAILY PEAK
1	0.71	7	0.00	8	0.00	8	0.22	23	1.0
2	0.00	7	0.00	8	0.00	8	0.00	23	0.0
3	0.43	7	0.00	8	0.0	0	0.20	15	1.0
4	0.0	0	0.00	5	0.13	8	0.08	13	1.0
5	1.43	7	0.00	8	0.00	8	0.43	23	2.0
6	0.00	7	0.00	8	0.13	8	0.04	23	1.0
7	0.14	7	0.00	8	0.00	8	0.04	23	1.0
8	0.00	7	0.00	8	0.00	8	0.00	23	0.0
9	0.43	7	0.00	8	0.00	8	0.13	23	1.0
10	0.86	7	0.00	8	0.00	8	0.26	23	1.0
11	0.86	7	0.00	8	0.00	8	0.26	23	4.0
12	0.57	7	0.00	8	0.88	8	0.48	23	7.0
13	0.43	7	0.00	6	0.00	8	0.14	21	2.0
14	0.71	7	0.00	8	0.00	8	0.22	23	2.0
15	0.43	7	0.00	8	0.00	8	0.13	23	1.0
16	0.43	7	0.00	8	0.00	8	0.13	23	3.0
17	0.14	7	0.00	8	0.00	8	0.04	23	1.0
18	1.00	7	0.00	8	0.00	8	0.30	23	3.0
19	0.43	7	0.00	8	0.00	8	0.13	23	1.0
20	0.00	7	0.00	8	0.25	8	0.09	23	1.0
21	0.29	7	0.00	8	0.00	8	0.09	23	1.0
22	0.43	7	0.00	8	0.00	8	0.13	23	1.0
23	0.00	7	0.00	8	0.00	8	0.00	23	0.0
24	0.14	7	0.00	8	0.00	8	0.04	23	1.0
25	1.14	7	0.00	8	0.00	8	0.35	23	2.0
26	0.00	7	0.00	8	0.00	8	0.00	23	0.0
27	0.86	7	0.13	8	0.13	8	0.35	23	1.0
28	0.14	7	0.00	8	0.13	8	0.09	23	1.0
29	1.43	7	0.00	8	0.00	8	0.43	23	2.0
30	0.71	7	0.00	8	0.00	8	0.22	23	2.0
31	0.71	7	0.25	8	0.00	8	0.30	23	3.0

SUMMARY OF PEAK READINGS, PEAK AVERAGES, MONTHLY STATS

PEAK HOURLY READING 7.0 ON DAY 12 2301 - 2400 HOURS

WIND READINGS HOUR BEFORE/DURING /AFTER PEAK HOURLY READING

C 0 / W 7 / W 7

PEAK CALENDAR DAY AVG. 0.48 ON DAY 12

ARITHMETIC MEAN 0.17 NO. RDGS. 693 HRS. (%OPER. 93.15%)

COMPARISON TO CLEAN AIR (MAXIMUM LEVELS) REGULATION

	REGULATIONS	NO.IN EXCESS OF REGULATION	% OF TIME PER MONTH THAT REG. WAS EXCEEDED
1-HOUR	10.00	0	0.0
24-HOUR	3.00	0	0.0

COMPARISON TO 24-HOUR REGULATION WAS ON A CALENDAR DAY BASIS ONLY

FREQUENCY DISTRIBUTION

RANGE	NO.OF RDGS.	PERCENT	CUMULATIVE
0.0 - 0.000	604	87.2	87.2
0.001 - 1.500	68	9.8	97.0
1.501 - 3.999	19	2.7	99.7
4.000 - 7.999	2	0.3	100.0
8.000 OR OVER	0	0.0	100.0

ALL MEANS ARE ARITHMETIC UNLESS OTHERWISE SPECIFIED

HYDROGEN SULFIDE (H2S) S050

PPB ONE HOUR AVERAGE

MONTH JULY 84

DAY	1	2	3	4	5	6	7	8	9	10	11	12
1	1.0	1.0	1.0	1.0	1.0	0.0	*****	0.0	0.0	0.0	0.0	0.
2	0.0	0.0	0.0	0.0	0.0	0.0	*****	0.0	0.0	0.0	0.0	0.
3	0.0	0.0	0.0	1.0	1.0	1.0	*****	0.0	0.0	0.0	0.0	0.
4	*****	*****	*****	*****	*****	*****	*****	*****	*****	*****	*****	0.0
5	1.0	1.0	2.0	2.0	2.0	2.0	*****	0.0	0.0	0.0	0.0	0.
6	0.0	0.0	0.0	0.0	0.0	0.0	*****	0.0	0.0	0.0	0.0	0.
7	0.0	1.0	0.0	0.0	0.0	0.0	*****	0.0	0.0	0.0	0.0	0.
8	0.0	0.0	0.0	0.0	0.0	0.0	*****	0.0	0.0	0.0	0.0	0.0
9	0.0	0.0	1.0	0.0	1.0	1.0	*****	0.0	0.0	0.0	0.0	0.0
10	1.0	1.0	1.0	1.0	1.0	1.0	*****	0.0	0.0	0.0	0.0	0.
11	0.0	0.0	0.0	4.0	1.0	1.0	*****	0.0	0.0	0.0	0.0	0.
12	0.0	1.0	1.0	0.0	1.0	1.0	*****	0.0	0.0	0.0	0.0	0.
13	1.0	2.0	0.0	0.0	0.0	0.0	*****	0.0	0.0	0.0	*****	*****
14	0.0	0.0	1.0	1.0	2.0	1.0	*****	0.0	0.0	0.0	0.0	0.
15	1.0	1.0	0.0	1.0	0.0	0.0	*****	0.0	0.0	0.0	0.0	0.
16	0.0	0.0	0.0	0.0	0.0	3.0	*****	0.0	0.0	0.0	0.0	0.
17	0.0	0.0	0.0	0.0	0.0	1.0	*****	0.0	0.0	0.0	0.0	0.0
18	0.0	0.0	0.0	2.0	2.0	3.0	*****	0.0	0.0	0.0	0.0	0.0
19	0.0	0.0	1.0	1.0	1.0	0.0	*****	0.0	0.0	0.0	0.0	0.
20	0.0	0.0	0.0	0.0	0.0	0.0	*****	0.0	0.0	0.0	0.0	0.
21	1.0	0.0	0.0	0.0	1.0	0.0	*****	0.0	0.0	0.0	0.0	0.0
22	0.0	0.0	1.0	0.0	1.0	1.0	*****	0.0	0.0	0.0	0.0	0.0
23	0.0	0.0	0.0	0.0	0.0	0.0	*****	0.0	0.0	0.0	0.0	0.
24	0.0	0.0	0.0	0.0	0.0	0.0	*****	1.0	0.0	0.0	0.0	0.
25	0.0	1.0	2.0	2.0	2.0	1.0	*****	0.0	0.0	0.0	0.0	0.
26	0.0	0.0	0.0	0.0	0.0	0.0	*****	0.0	0.0	0.0	0.0	0.0
27	0.0	1.0	1.0	1.0	1.0	1.0	*****	1.0	1.0	0.0	0.0	0.
28	0.0	1.0	0.0	0.0	0.0	0.0	*****	0.0	0.0	0.0	0.0	0.
29	2.0	2.0	1.0	1.0	2.0	2.0	*****	0.0	0.0	0.0	0.0	0.
30	0.0	0.0	1.0	0.0	2.0	1.0	*****	1.0	0.0	0.0	0.0	0.
31	0.0	0.0	0.0	0.0	1.0	3.0	*****	1.0	1.0	1.0	0.0	0.0

DAY	13	14	15	16	17	18	19	20	21	22	23	24
1	0.0	0.0	0.0	0.0	0.0	0.0	0.0	0.0	0.0	0.0	0.0	0.
2	0.0	0.0	0.0	0.0	0.0	0.0	0.0	0.0	0.0	0.0	0.0	0.
3	0.0	0.0	0.0	0.0	*****	*****	*****	*****	*****	*****	*****	****
4	0.0	0.0	0.0	0.0	0.0	0.0	0.0	0.0	0.0	0.0	0.0	1.0
5	0.0	0.0	0.0	0.0	0.0	0.0	0.0	0.0	0.0	0.0	0.0	0.0
6	0.0	0.0	0.0	0.0	0.0	0.0	0.0	0.0	0.0	0.0	0.0	1.
7	0.0	0.0	0.0	0.0	0.0	0.0	0.0	0.0	0.0	0.0	0.0	0.
8	0.0	0.0	0.0	0.0	0.0	0.0	0.0	0.0	0.0	0.0	0.0	0.0
9	0.0	0.0	0.0	0.0	0.0	0.0	0.0	0.0	0.0	0.0	0.0	0.0
10	0.0	0.0	0.0	0.0	0.0	0.0	0.0	0.0	0.0	0.0	0.0	0.
11	0.0	0.0	0.0	0.0	0.0	0.0	0.0	0.0	0.0	0.0	0.0	0.
12	0.0	0.0	0.0	0.0	0.0	0.0	0.0	0.0	0.0	0.0	0.0	7.
13	0.0	0.0	0.0	0.0	0.0	0.0	0.0	0.0	0.0	0.0	0.0	0.0
14	0.0	0.0	0.0	0.0	0.0	0.0	0.0	0.0	0.0	0.0	0.0	0.
15	0.0	0.0	0.0	0.0	0.0	0.0	0.0	0.0	0.0	0.0	0.0	0.
16	0.0	0.0	0.0	0.0	0.0	0.0	0.0	0.0	0.0	0.0	0.0	0.
17	0.0	0.0	0.0	0.0	0.0	0.0	0.0	0.0	0.0	0.0	0.0	0.0
18	0.0	0.0	0.0	0.0	0.0	0.0	0.0	0.0	0.0	0.0	0.0	0.0
19	0.0	0.0	0.0	0.0	0.0	0.0	0.0	0.0	0.0	0.0	0.0	0.
20	0.0	0.0	0.0	0.0	0.0	0.0	0.0	0.0	0.0	0.0	1.0	1.
21	0.0	0.0	0.0	0.0	0.0	0.0	0.0	0.0	0.0	0.0	0.0	0.
22	0.0	0.0	0.0	0.0	0.0	0.0	0.0	0.0	0.0	0.0	0.0	0.0
23	0.0	0.0	0.0	0.0	0.0	0.0	0.0	0.0	0.0	0.0	0.0	0.
24	0.0	0.0	0.0	0.0	0.0	0.0	0.0	0.0	0.0	0.0	0.0	0.
25	0.0	0.0	0.0	0.0	0.0	0.0	0.0	0.0	0.0	0.0	0.0	0.
26	0.0	0.0	0.0	0.0	0.0	0.0	0.0	0.0	0.0	0.0	0.0	0.0
27	0.0	0.0	0.0	0.0	0.0	0.0	0.0	0.0	0.0	0.0	0.0	1.0
28	0.0	0.0	0.0	0.0	0.0	0.0	0.0	0.0	0.0	0.0	0.0	1.
29	0.0	0.0	0.0	0.0	0.0	0.0	0.0	0.0	0.0	0.0	0.0	0.
30	0.0	0.0	0.0	0.0	0.0	0.0	0.0	0.0	0.0	0.0	0.0	0.
31	0.0	0.0	0.0	0.0	0.0	0.0	0.0	0.0	0.0	0.0	0.0	0.0

OXIDES OF NITROGEN - NO S050

FREQUENCY DISTRIBUTION TABLES

MONTH AUG. 84

PERCENT OF READINGS WITH WIND DIRECTION

WIND DIRECTION	POLLUTANT OCC. HOURS	FREQUENCY OF OCCURRENCE %
N	9	6.3
NE	13	9.2
E	29	20.4
SE	17	12.0
S	30	21.1
SW	12	8.5
W	15	10.6
NW	11	7.7
CALM	6	4.2
INOP	0	0.0

FREQUENCY OF READINGS WITH WIND DIRECTION

WIND DIRECTION	HOURS OF WIND OCCURRENCE	HOURS OF READINGS	FREQUENCY OF READINGS WITH WIND
N	60	9	15.0
NE	40	13	32.5
E	59	29	49.2
SE	47	17	36.2
S	81	30	37.0
SW	77	12	15.6
W	171	15	8.8
NW	110	11	10.0
CALM	10	6	60.0
INOP	0	0	0.0

NOTE.1. READINGS CONSIDERED IN FREQUENCY DISTRIBUTION TABLES ARE THOSE GREATER THAN 0.0010 PPM

2. VALUE OF ****** INDICATES NO DATA AVAILABLE OR INSUFFICIENT DATA

3. WIND DATA UTILIZED FOR CORRELATION PURPOSES WAS MONITORED AT ST ALBERT S050

OXIDES OF NITROGEN - NO2 S050

PPM ONE HOUR AVERAGE

MONTH AUG. 84

DAY	0001-0800 AVE.	NO.	0801-1600 AVE.	NO.	1601-2400 AVE.	NO.	FULL DAY AVE.	NO.	DAILY PEAK
1	0.02	5	0.02	8	0.03	8	0.02	21	0.05
2	0.02	7	0.02	8	0.03	8	0.03	23	0.05
3	0.03	7	0.01	7	0.03	8	0.02	22	0.05
4	0.03	7	0.01	8	0.01	2	0.02	17	0.04
5	0.0	0	0.0	0	0.0	0	0.0	0	0.0
6	0.0	0	0.0	0	0.0	0	0.0	0	0.0
7	0.00	6	0.01	6	0.01	8	0.01	20	0.02
8	0.00	7	0.00	8	0.02	8	0.01	23	0.03
9	0.03	7	0.01	8	0.02	8	0.02	23	0.04
10	0.01	7	0.01	8	0.02	8	0.01	23	0.02
11	0.01	7	0.01	8	0.01	8	0.01	23	0.03
12	0.01	7	0.01	8	0.00	8	0.01	23	0.02
13	0.00	7	0.01	8	0.00	8	0.00	23	0.02
14	0.00	7	0.00	8	0.01	8	0.01	23	0.03
15	0.01	7	0.01	8	0.01	8	0.01	23	0.03
16	0.01	7	0.01	8	0.01	8	0.01	23	0.04
17	0.02	7	0.03	8	0.02	8	0.02	23	0.04
18	0.00	7	0.00	8	0.00	8	0.00	23	0.01
19	0.01	7	0.01	8	0.00	8	0.01	23	0.02
20	0.00	7	0.00	8	0.00	8	0.00	23	0.00
21	0.01	7	0.01	8	0.02	8	0.01	23	0.04
22	0.01	7	0.01	8	0.03	8	0.02	23	0.05
23	0.01	7	0.00	8	0.01	8	0.01	23	0.02
24	0.00	7	0.01	8	0.01	8	0.01	23	0.04
25	0.01	7	0.01	8	0.01	8	0.01	23	0.02
26	0.00	7	0.00	8	0.01	8	0.01	23	0.02
27	0.00	7	0.01	8	0.00	8	0.01	23	0.03
28	0.00	7	0.00	8	0.01	8	0.00	23	0.01
29	0.00	7	0.01	8	0.01	8	0.01	23	0.02
30	0.01	7	0.01	8	0.01	8	0.01	23	0.03
31	0.02	7	0.01	8	0.02	8	0.02	23	0.03

SUMMARY OF PEAK READINGS, PEAK AVERAGES, MONTHLY STATS

PEAK HOURLY READING 0.05 ON DAY 22 2101 - 2200 HOURS

WIND READINGS HOUR BEFORE/DURING /AFTER PEAK HOURLY READING

E 7 / E 7 / SW 3

PEAK CALENDAR DAY AVG. 0.03 ON DAY 2

ARITHMETIC MEAN 0.01 NO. RDGS. 655 HRS. (%OPER. 88.04%)

COMPARISON TO CLEAN AIR (MAXIMUM LEVELS) REGULATION

	REGULATIONS	NO.IN EXCESS OF REGULATION	% OF TIME PER MONTH THAT REG. WAS EXCEEDED
1-HOUR	0.21	0	0.0
24-HOUR	0.11	0	0.0

COMPARISON TO 24-HOUR REGULATION WAS ON A CALENDAR DAY BASIS ONLY

FREQUENCY DISTRIBUTION

RANGE	NO.OF RDGS.	PERCENT	CUMULATIVE
0.0 - 0.000	213	32.5	32.5
0.001 - 0.110	442	67.5	100.0
0.111 - 0.210	0	0.0	100.0
0.211 - 0.420	0	0.0	100.0
0.421 OR OVER	0	0.0	100.0

ALL MEANS ARE ARITHMETIC UNLESS OTHERWISE SPECIFIED

OXIDES OF NITROGEN - NO2 S050

PPM ONE HOUR AVERAGE

MONTH AUG. 84

DAY	1	2	3	4	5	6	7	8	9	10	11	12
1	*****	*****	0.04	0.01	0.02	0.03	*****	0.01	0.03	0.02	0.03	0.01
2	0.04	0.03	0.02	0.02	0.02	0.02	*****	0.02	0.02	0.02	0.03	0.02
3	0.03	0.02	0.02	0.02	0.03	0.03	*****	0.03	0.01	0.01	0.01	0.01
4	0.04	0.03	0.02	0.03	0.03	0.03	*****	0.01	0.01	0.01	0.01	0.01
5	*****	*****	*****	*****	*****	*****	*****	*****	*****	*****	*****	*****
6	*****	*****	*****	*****	*****	*****	*****	*****	*****	*****	*****	*****
7	0.00	0.00	0.00	0.00	0.00	0.00	*****	*****	*****	*****	0.01	0.01
8	0.01	0.00	0.00	0.00	0.00	0.00	*****	0.01	0.00	0.01	0.01	0.01
9	0.04	0.03	0.03	0.02	0.02	0.02	*****	0.02	0.02	0.01	0.02	0.01
10	0.02	0.01	0.01	0.00	0.00	0.01	*****	0.01	0.00	0.01	0.01	0.0
11	0.01	0.01	0.01	0.01	0.00	0.01	*****	0.02	0.01	0.01	0.01	0.0
12	0.02	0.01	0.01	0.01	0.01	0.01	*****	0.01	0.01	0.02	0.01	0.0
13	0.00	0.00	0.01	0.00	0.00	0.01	*****	0.01	0.01	0.01	0.02	0.0
14	0.00	0.00	0.00	0.00	0.00	0.00	*****	0.01	0.00	0.00	0.00	0.0
15	0.01	0.01	0.00	0.01	0.01	0.01	*****	0.00	0.01	0.01	0.01	0.0
16	0.01	0.02	0.01	0.01	0.01	0.00	*****	0.00	0.02	0.04	0.01	0.0
17	0.02	0.02	0.02	0.02	0.01	0.02	*****	0.02	0.03	0.03	0.02	0.0
18	0.00	0.00	0.00	0.00	0.00	0.00	*****	0.01	0.01	0.01	0.00	0.0
19	0.00	0.00	0.01	0.01	0.01	0.01	*****	0.00	0.00	0.02	0.01	0.0
20	0.00	0.00	0.00	0.00	0.00	0.00	*****	0.00	0.00	0.00	0.00	0.0
21	0.00	0.01	0.01	0.00	0.01	0.00	*****	0.01	0.01	0.01	0.01	0.0
22	0.03	0.02	0.02	0.01	0.00	0.01	*****	0.01	0.02	0.01	0.02	0.0
23	0.02	0.02	0.02	0.00	0.00	0.00	*****	0.01	0.01	0.01	0.01	0.0
24	0.00	0.00	0.00	0.00	0.00	0.00	*****	0.01	0.01	0.00	0.00	0.0
25	0.02	0.02	0.01	0.01	0.02	0.01	*****	0.01	0.01	0.01	0.01	0.0
26	0.00	0.00	0.00	0.00	0.00	0.01	*****	0.01	0.01	0.01	0.00	0.0
27	0.00	0.00	0.00	0.00	0.00	0.01	*****	0.02	0.02	0.03	0.02	0.0
28	0.00	0.00	0.00	0.00	0.00	0.00	*****	0.00	0.00	0.01	0.00	0.0
29	0.00	0.00	0.00	0.00	0.00	0.00	*****	0.01	0.01	0.01	0.00	0.0
30	0.01	0.01	0.01	0.00	0.00	0.01	*****	0.01	0.01	0.01	0.01	0.0
31	0.03	0.02	0.02	0.02	0.02	0.02	*****	0.02	0.02	0.01	0.01	0.0

DAY	13	14	15	16	17	18	19	20	21	22	23	24
1	0.01	0.01	0.01	0.01	0.01	0.01	0.01	0.02	0.03	0.04	0.04	0.0
2	0.03	0.03	0.02	0.02	0.02	0.02	0.02	0.03	0.03	0.03	0.04	0.0
3	0.01	0.02	0.01	*****	0.01	0.02	0.01	0.01	0.04	0.03	0.05	0.0
4	0.01	0.01	0.01	0.01	0.01	*****	0.01	*****	*****	*****	*****	*****
5	*****	*****	*****	*****	*****	*****	*****	*****	*****	*****	*****	*****
6	*****	*****	*****	*****	*****	*****	*****	*****	*****	*****	*****	*****
7	0.00	0.01	0.01	0.00	0.01	0.01	0.01	0.02	0.01	0.01	0.01	0.0
8	0.00	0.00	0.01	0.01	0.01	0.01	0.00	0.01	0.03	0.03	0.02	0.0
9	0.01	0.01	0.01	0.01	0.01	0.01	0.01	0.04	0.04	0.04	0.02	0.0
10	0.01	0.01	0.01	0.01	0.01	0.01	0.01	0.02	0.02	0.02	0.02	0.0
11	0.01	0.00	0.00	0.01	0.00	0.01	0.01	0.01	0.03	0.02	0.02	0.0
12	0.01	0.01	0.01	0.01	0.00	0.00	0.00	0.01	0.01	0.01	0.01	0.0
13	0.01	0.01	0.00	0.00	0.00	0.00	0.00	0.00	0.00	0.00	0.00	0.0
14	0.00	0.00	0.00	0.00	0.01	0.00	0.01	0.02	0.02	0.01	0.03	0.0
15	0.01	0.01	0.00	0.01	0.00	0.00	0.01	0.01	0.02	0.02	0.02	0.0
16	0.01	0.00	0.00	0.00	0.00	0.00	0.00	0.01	0.02	0.02	0.02	0.0
17	0.03	0.02	0.02	0.01	0.01	0.01	0.01	0.02	0.02	0.02	0.04	0.0
18	0.00	0.00	0.00	0.00	0.00	0.00	0.00	0.00	0.00	0.00	0.00	0.0
19	0.01	0.01	0.00	0.00	0.00	0.00	0.00	0.00	0.01	0.01	0.00	0.0
20	0.00	0.00	0.00	0.00	0.00	0.00	0.00	0.00	0.00	0.00	0.00	0.0
21	0.01	0.01	0.01	0.01	0.00	0.01	0.01	0.02	0.04	0.03	0.04	0.0
22	0.02	0.01	0.01	0.00	0.00	0.01	0.02	0.04	0.05	0.05	0.02	0.0
23	0.01	0.00	0.00	0.00	0.00	0.00	0.00	0.00	0.02	0.01	0.00	0.0
24	0.03	0.02	0.01	0.00	0.00	0.01	0.01	0.00	0.01	0.03	0.04	0.0
25	0.00	0.01	0.01	0.01	0.01	0.00	0.01	0.01	0.01	0.01	0.01	0.0
26	0.00	0.00	0.00	0.00	0.00	0.01	0.00	0.02	0.02	0.02	0.01	0.0
27	0.00	0.00	0.00	0.00	0.00	0.00	0.01	0.01	0.01	0.00	0.00	0.0
28	0.00	0.00	0.01	0.01	0.01	0.01	0.01	0.01	0.01	0.00	0.00	0.0
29	0.01	0.01	0.01	0.01	0.01	0.01	0.00	0.01	0.01	0.01	0.02	0.0
30	0.01	0.01	0.01	0.01	0.01	0.01	0.01	0.01	0.01	0.03	0.01	0.0
31	0.01	0.01	0.01	0.01	0.00	0.01	0.02	0.02	0.02	0.02	0.02	0.0

OXIDES OF NITROGEN - NO2 S050

FREQUENCY DISTRIBUTION TABLES

MONTH AUG. 84

PERCENT OF READINGS WITH WIND DIRECTION

WIND DIRECTION	POLLUTANT OCC. HOURS	FREQUENCY OF OCCURRENCE %
N	35	7.9
NE	31	7.0
E	50	11.3
SE	46	10.4
S	77	17.4
SW	53	12.0
W	94	21.3
NW	47	10.6
CALM	9	2.0
INOP	0	0.0

FREQUENCY OF READINGS WITH WIND DIRECTION

WIND DIRECTION	HOURS OF WIND OCCURRENCE	HOURS OF READINGS	FREQUENCY OF READINGS WITH WIND
N	60	35	58.3
NE	40	31	77.5
E	59	50	84.7
SE	47	46	97.9
S	81	77	95.1
SW	77	53	68.8
W	171	94	55.0
NW	110	47	42.7
CALM	10	9	90.0
INOP	0	0	0.0

NOTE.1. READINGS CONSIDERED IN FREQUENCY DISTRIBUTION TABLES ARE THOSE GREATER THAN 0.0010 PPM

2. VALUE OF ****** INDICATES NO DATA AVAILABLE OR INSUFFICIENT DATA

3. WIND DATA UTILIZED FOR CORRELATION PURPOSES WAS MONITORED AT ST ALBERT S050

SULFUR DIOXIDE S050

PPM ONE HOUR AVERAGE

MONTH AUG. 84

DAY	0001-0800 AVE.	NO.	0801-1600 AVE.	NO.	1601-2400 AVE.	NO.	FULL DAY AVE.	NO.	DAILY PEAK
1	0.00	7	0.00	8	0.00	8	0.00	23	0.00
2	0.00	7	0.00	8	0.00	8	0.00	23	0.00
3	0.00	7	0.00	8	0.00	8	0.00	23	0.00
4	0.00	7	0.00	8	0.00	8	0.00	23	0.00
5	0.00	7	0.00	8	0.00	8	0.00	23	0.00
6	0.00	7	0.00	8	0.00	8	0.00	23	0.00
7	0.00	7	0.00	8	0.00	8	0.00	23	0.00
8	0.00	7	0.00	8	0.00	8	0.00	23	0.00
9	0.00	7	0.00	8	0.00	8	0.00	23	0.00
10	0.00	7	0.00	8	0.00	8	0.00	23	0.00
11	0.00	7	0.00	8	0.00	8	0.00	23	0.00
12	0.00	7	0.00	8	0.00	8	0.00	23	0.00
13	0.00	7	0.00	8	0.00	8	0.00	23	0.00
14	0.00	7	0.00	8	0.00	8	0.00	23	0.00
15	0.00	7	0.00	8	0.00	8	0.00	23	0.00
16	0.00	7	0.00	8	0.00	8	0.00	23	0.00
17	0.00	7	0.00	8	0.00	8	0.00	23	0.00
18	0.00	7	0.00	8	0.00	8	0.00	23	0.00
19	0.00	7	0.00	8	0.00	8	0.00	23	0.00
20	0.00	7	0.00	8	0.00	8	0.00	23	0.00
21	0.00	7	0.00	8	0.00	8	0.00	23	0.00
22	0.00	7	0.00	8	0.00	8	0.00	23	0.01
23	0.00	7	0.00	8	0.00	8	0.00	23	0.00
24	0.00	7	0.00	8	0.00	8	0.00	23	0.00
25	0.00	7	0.00	8	0.00	8	0.00	23	0.01
26	0.00	7	0.00	8	0.00	8	0.00	23	0.00
27	0.00	7	0.00	8	0.00	8	0.00	23	0.00
28	0.00	7	0.00	8	0.00	8	0.00	23	0.00
29	0.00	7	0.00	8	0.00	8	0.00	23	0.00
30	0.00	7	0.00	8	0.00	8	0.00	23	0.00
31	0.00	8	0.00	8	0.00	8	0.00	24	0.00

SUMMARY OF PEAK READINGS, PEAK AVERAGES, MONTHLY STATS

PEAK HOURLY READING 0.01 ON DAY 22 101 - 200 HOURS

WIND READINGS HOUR BEFORE/DURING /AFTER PEAK HOURLY READING

S 7 / S 7 / S 7

PEAK CALENDAR DAY AVG. 0.00 ON DAY 25

ARITHMETIC MEAN 0.00 NO. RDGS. 714 HRS. (%OPER. 95.97%)

COMPARISON TO CLEAN AIR (MAXIMUM LEVELS) REGULATION

	REGULATIONS	NO.IN EXCESS OF REGULATION	% OF TIME PER MONTH THAT REG. WAS EXCEEDED
1-HOUR	0.17	0	0.0
24-HOUR	0.06	0	0.0

COMPARISON TO 24-HOUR REGULATION WAS ON A CALENDAR DAY BASIS ONLY

FREQUENCY DISTRIBUTION

RANGE	NO.OF RDGS.	PERCENT	CUMULATIVE
0.0 - 0.000	711	99.6	99.6
0.001 - 0.060	3	0.4	100.0
0.061 - 0.170	0	0.0	100.0
0.171 - 0.340	0	0.0	100.0
0.341 OR OVER	0	0.0	100.0

ALL MEANS ARE ARITHMETIC UNLESS OTHERWISE SPECIFIED

SULFUR DIOXIDE S050

PPM ONE HOUR AVERAGE

MONTH AUG. 84

DAY	1	2	3	4	5	6	7	8	9	10	11	12
1	0.00	0.00	0.00	0.00	0.00	0.00	*****	0.00	0.00	0.00	0.00	0.00
2	0.00	0.00	0.00	0.00	0.00	0.00	*****	0.00	0.00	0.00	0.00	0.00
3	0.00	0.00	0.00	0.00	0.00	0.00	*****	0.00	0.00	0.00	0.00	0.00
4	0.00	0.00	0.00	0.00	0.00	0.00	*****	0.00	0.00	0.00	0.00	0.00
5	0.00	0.00	0.00	0.00	0.00	0.00	*****	0.00	0.00	0.00	0.00	0.00
6	0.00	0.00	0.00	0.00	0.00	0.00	*****	0.00	0.00	0.00	0.00	0.00
7	0.00	0.00	0.00	0.00	0.00	0.00	*****	0.00	0.00	0.00	0.00	0.00
8	0.00	0.00	0.00	0.00	0.00	0.00	*****	0.00	0.00	0.00	0.00	0.00
9	0.00	0.00	0.00	0.00	0.00	0.00	*****	0.00	0.00	0.00	0.00	0.00
10	0.00	0.00	0.00	0.00	0.00	0.00	*****	0.00	0.00	0.00	0.00	0.00
11	0.00	0.00	0.00	0.00	0.00	0.00	*****	0.00	0.00	0.00	0.00	0.00
12	0.00	0.00	0.00	0.00	0.00	0.00	*****	0.00	0.00	0.00	0.00	0.00
13	0.00	0.00	0.00	0.00	0.00	0.00	*****	0.00	0.00	0.00	0.00	0.00
14	0.00	0.00	0.00	0.00	0.00	0.00	*****	0.00	0.00	0.00	0.00	0.00
15	0.00	0.00	0.00	0.00	0.00	0.00	*****	0.00	0.00	0.00	0.00	0.00
16	0.00	0.00	0.00	0.00	0.00	0.00	*****	0.00	0.00	0.00	0.00	0.00
17	0.00	0.00	0.00	0.00	0.00	0.00	*****	0.00	0.00	0.00	0.00	0.00
18	0.00	0.00	0.00	0.00	0.00	0.00	*****	0.00	0.00	0.00	0.00	0.00
19	0.00	0.00	0.00	0.00	0.00	0.00	*****	0.00	0.00	0.00	0.00	0.00
20	0.00	0.00	0.00	0.00	0.00	0.00	*****	0.00	0.00	0.00	0.00	0.00
21	0.00	0.00	0.00	0.00	0.00	0.00	*****	0.00	0.00	0.00	0.00	0.00
22	0.00	0.01	0.00	0.00	0.00	0.00	*****	0.00	0.00	0.00	0.00	0.00
23	0.00	0.00	0.00	0.00	0.00	0.00	*****	0.00	0.00	0.00	0.00	0.00
24	0.00	0.00	0.00	0.00	0.00	0.00	*****	0.00	0.00	0.00	0.00	0.00
25	0.00	0.00	0.00	0.00	0.00	0.00	*****	0.00	0.00	0.00	0.00	0.00
26	0.00	0.00	0.00	0.00	0.00	0.00	*****	0.00	0.00	0.00	0.00	0.00
27	0.00	0.00	0.00	0.00	0.00	0.00	*****	0.00	0.00	0.00	0.00	0.00
28	0.00	0.00	0.00	0.00	0.00	0.00	*****	0.00	0.00	0.00	0.00	0.00
29	0.00	0.00	0.00	0.00	0.00	0.00	*****	0.00	0.00	0.00	0.00	0.00
30	0.00	0.00	0.00	0.00	0.00	0.00	*****	0.00	0.00	0.00	0.00	0.00
31	0.00	0.00	0.00	0.00	0.00	0.00	0.00	0.00	0.00	0.00	0.00	0.00

DAY	13	14	15	16	17	18	19	20	21	22	23	24
1	0.00	0.00	0.00	0.00	0.00	0.00	0.00	0.00	0.00	0.00	0.00	0.00
2	0.00	0.00	0.00	0.00	0.00	0.00	0.00	0.00	0.00	0.00	0.00	0.00
3	0.00	0.00	0.00	0.00	0.00	0.00	0.00	0.00	0.00	0.00	0.00	0.00
4	0.00	0.00	0.00	0.00	0.00	0.00	0.00	0.00	0.00	0.00	0.00	0.00
5	0.00	0.00	0.00	0.00	0.00	0.00	0.00	0.00	0.00	0.00	0.00	0.00
6	0.00	0.00	0.00	0.00	0.00	0.00	0.00	0.00	0.00	0.00	0.00	0.00
7	0.00	0.00	0.00	0.00	0.00	0.00	0.00	0.00	0.00	0.00	0.00	0.00
8	0.00	0.00	0.00	0.00	0.00	0.00	0.00	0.00	0.00	0.00	0.00	0.00
9	0.00	0.00	0.00	0.00	0.00	0.00	0.00	0.00	0.00	0.00	0.00	0.00
10	0.00	0.00	0.00	0.00	0.00	0.00	0.00	0.00	0.00	0.00	0.00	0.00
11	0.00	0.00	0.00	0.00	0.00	0.00	0.00	0.00	0.00	0.00	0.00	0.00
12	0.00	0.00	0.00	0.00	0.00	0.00	0.00	0.00	0.00	0.00	0.00	0.00
13	0.00	0.00	0.00	0.00	0.00	0.00	0.00	0.00	0.00	0.00	0.00	0.00
14	0.00	0.00	0.00	0.00	0.00	0.00	0.00	0.00	0.00	0.00	0.00	0.00
15	0.00	0.00	0.00	0.00	0.00	0.00	0.00	0.00	0.00	0.00	0.00	0.00
16	0.00	0.00	0.00	0.00	0.00	0.00	0.00	0.00	0.00	0.00	0.00	0.00
17	0.00	0.00	0.00	0.00	0.00	0.00	0.00	0.00	0.00	0.00	0.00	0.00
18	0.00	0.00	0.00	0.00	0.00	0.00	0.00	0.00	0.00	0.00	0.00	0.00
19	0.00	0.00	0.00	0.00	0.00	0.00	0.00	0.00	0.00	0.00	0.00	0.00
20	0.00	0.00	0.00	0.00	0.00	0.00	0.00	0.00	0.00	0.00	0.00	0.00
21	0.00	0.00	0.00	0.00	0.00	0.00	0.00	0.00	0.00	0.00	0.00	0.00
22	0.00	0.00	0.00	0.00	0.00	0.00	0.00	0.00	0.00	0.00	0.00	0.00
23	0.00	0.00	0.00	0.00	0.00	0.00	0.00	0.00	0.00	0.00	0.00	0.00
24	0.00	0.00	0.00	0.00	0.00	0.00	0.00	0.00	0.00	0.00	0.00	0.00
25	0.00	0.00	0.01	0.01	0.00	0.00	0.00	0.00	0.00	0.00	0.00	0.00
26	0.00	0.00	0.00	0.00	0.00	0.00	0.00	0.00	0.00	0.00	0.00	0.00
27	0.00	0.00	0.00	0.00	0.00	0.00	0.00	0.00	0.00	0.00	0.00	0.00
28	0.00	0.00	0.00	0.00	0.00	0.00	0.00	0.00	0.00	0.00	0.00	0.00
29	0.00	0.00	0.00	0.00	0.00	0.00	0.00	0.00	0.00	0.00	0.00	0.00
30	0.00	0.00	0.00	0.00	0.00	0.00	0.00	0.00	0.00	0.00	0.00	0.00
31	0.00	0.00	0.00	0.00	0.00	0.00	0.00	0.00	0.00	0.00	0.00	0.00

SULFUR DIOXIDE S050

FREQUENCY DISTRIBUTION TABLES

MONTH AUG. 84

PERCENT OF READINGS WITH WIND DIRECTION

WIND DIRECTION	POLLUTANT OCC. HOURS	FREQUENCY OF OCCURRENCE %
N	0	0.0
NE	0	0.0
E	0	0.0
SE	0	0.0
S	1	33.3
SW	0	0.0
W	2	66.7
NW	0	0.0
CALM	0	0.0
INOP	0	0.0

FREQUENCY OF READINGS WITH WIND DIRECTION

WIND DIRECTION	HOURS OF WIND OCCURRENCE	HOURS OF READINGS	FREQUENCY OF READINGS WITH WIND
N	71	0	0.0
NE	48	0	0.0
E	68	0	0.0
SE	50	0	0.0
S	85	1	1.2
SW	81	0	0.0
W	181	2	1.1
NW	118	0	0.0
CALM	12	0	0.0
INOP	0	0	0.0

NOTE.1. READINGS CONSIDERED IN FREQUENCY DISTRIBUTION TABLES ARE THOSE GREATER THAN 0.0001 PPM

2. VALUE OF ****** INDICATES NO DATA AVAILABLE OR INSUFFICIENT DATA

3. WIND DATA UTILIZED FOR CORRELATION PURPOSES WAS MONITORED AT ST ALBERT S050

HYDROGEN SULFIDE (H2S) S050

PPB ONE HOUR AVERAGE

MONTH AUG. 84

DAY	0001-0800 AVE.	NO.	0801-1600 AVE.	NO.	1601-2400 AVE.	NO.	FULL DAY AVE.	NO.	DAILY PEAK
1	0.43	7	0.00	8	0.00	8	0.13	23	1.0
2	0.29	7	0.00	8	0.00	8	0.09	23	1.0
3	0.01	7	0.00	8	0.00	8	0.00	23	0.1
4	0.00	7	0.00	8	0.00	8	0.00	23	0.0
5	0.29	7	0.00	8	0.00	8	0.09	23	1.0
6	0.14	7	0.00	8	0.00	8	0.04	23	1.0
7	0.14	7	0.00	8	0.00	7	0.05	22	1.0
8	0.00	7	0.00	8	0.00	8	0.00	23	0.0
9	0.00	7	0.00	8	0.00	8	0.00	23	0.0
10	0.00	7	0.00	8	0.00	8	0.00	23	0.0
11	0.00	7	0.00	8	0.00	8	0.00	23	0.0
12	0.00	7	0.00	8	0.00	8	0.00	23	0.0
13	0.00	7	0.00	8	0.00	8	0.00	23	0.0
14	0.00	7	0.00	8	0.00	8	0.00	23	0.0
15	0.00	7	0.00	8	0.00	8	0.00	23	0.0
16	0.71	7	0.13	8	0.00	8	0.26	23	2.0
17	0.14	7	0.13	8	0.00	8	0.09	23	1.0
18	0.00	7	0.00	8	0.00	8	0.00	23	0.0
19	0.57	7	0.00	8	0.00	8	0.17	23	2.0
20	0.00	7	0.00	8	0.00	8	0.00	23	0.0
21	0.29	7	0.00	8	0.00	8	0.09	23	1.0
22	0.00	7	0.00	8	0.00	8	0.00	23	0.0
23	0.00	7	0.00	8	0.00	8	0.00	23	0.0
24	0.00	7	0.00	8	0.00	8	0.00	23	0.0
25	0.71	7	0.00	8	0.00	8	0.22	23	2.0
26	0.00	7	0.00	8	0.00	8	0.00	23	0.0
27	0.29	7	0.14	7	0.00	8	0.14	22	1.0
28	0.00	7	0.00	8	0.00	8	0.00	23	0.0
29	0.00	7	0.00	8	0.25	8	0.09	23	2.0
30	0.00	7	0.00	8	0.13	8	0.04	23	1.0
31	0.00	8	0.00	8	0.00	8	0.00	24	0.0

SUMMARY OF PEAK READINGS, PEAK AVERAGES, MONTHLY STATS

PEAK HOURLY READING 2.0 ON DAY 16 701 - 800 HOURS

WIND READINGS HOUR BEFORE/DURING /AFTER PEAK HOURLY READING

C 0 / SW 3 / SW 3

PEAK CALENDAR DAY AVG. 0.26 ON DAY 16

ARITHMETIC MEAN 0.05 NO. RDGS. 712 HRS. (%OPER. 95.70%)

COMPARISON TO CLEAN AIR (MAXIMUM LEVELS) REGULATION

	REGULATIONS	NO.IN EXCESS OF REGULATION	% OF TIME PER MONTH THAT REG. WAS EXCEEDED
1-HOUR	10.00	0	0.0
24-HOUR	3.00	0	0.0

COMPARISON TO 24-HOUR REGULATION WAS ON A CALENDAR DAY BASIS ONLY

FREQUENCY DISTRIBUTION

RANGE	NO.OF RDGS.	PERCENT	CUMULATIVE
0.0 - 0.000	681	95.6	95.6
0.001 - 1.500	27	3.8	99.4
1.501 - 3.999	4	0.6	100.0
4.000 - 7.999	0	0.0	100.0
8.000 OR OVER	0	0.0	100.0

ALL MEANS ARE ARITHMETIC UNLESS OTHERWISE SPECIFIED

HYDROGEN SULFIDE (H2S) S050

PPB ONE HOUR AVERAGE

MONTH AUG. 84

DAY	1	2	3	4	5	6	7	8	9	10	11	12
1	0.0	0.0	0.0	0.0	1.0	1.0	*****	1.0	0.0	0.0	0.0	0.0
2	0.0	0.0	0.0	0.0	1.0	1.0	*****	0.0	0.0	0.0	0.0	0.0
3	0.0	0.0	0.0	0.0	0.0	0.0	*****	0.1	0.0	0.0	0.0	0.0
4	0.0	0.0	0.0	0.0	0.0	0.0	*****	0.0	0.0	0.0	0.0	0.0
5	1.0	0.0	0.0	0.0	0.0	1.0	*****	0.0	0.0	0.0	0.0	0.0
6	0.0	0.0	0.0	1.0	0.0	0.0	*****	0.0	0.0	0.0	0.0	0.0
7	0.0	0.0	0.0	0.0	0.0	1.0	*****	0.0	0.0	0.0	0.0	0.0
8	0.0	0.0	0.0	0.0	0.0	0.0	*****	0.0	0.0	0.0	0.0	0.0
9	0.0	0.0	0.0	0.0	0.0	0.0	*****	0.0	0.0	0.0	0.0	0.0
10	0.0	0.0	0.0	0.0	0.0	0.0	*****	0.0	0.0	0.0	0.0	0.0
11	0.0	0.0	0.0	0.0	0.0	0.0	*****	0.0	0.0	0.0	0.0	0.0
12	0.0	0.0	0.0	0.0	0.0	0.0	*****	0.0	0.0	0.0	0.0	0.0
13	0.0	0.0	0.0	0.0	0.0	0.0	*****	0.0	0.0	0.0	0.0	0.0
14	0.0	0.0	0.0	0.0	0.0	0.0	*****	0.0	0.0	0.0	0.0	0.0
15	0.0	0.0	0.0	0.0	0.0	0.0	*****	0.0	0.0	0.0	0.0	0.0
16	1.0	0.0	1.0	1.0	0.0	0.0	*****	2.0	1.0	0.0	0.0	0.0
17	0.0	0.0	0.0	1.0	0.0	0.0	*****	0.0	1.0	0.0	0.0	0.0
18	0.0	0.0	0.0	0.0	0.0	0.0	*****	0.0	0.0	0.0	0.0	0.0
19	0.0	0.0	0.0	2.0	1.0	1.0	*****	0.0	0.0	0.0	0.0	0.0
20	0.0	0.0	0.0	0.0	0.0	0.0	*****	0.0	0.0	0.0	0.0	0.0
21	0.0	0.0	0.0	0.0	1.0	1.0	*****	0.0	0.0	0.0	0.0	0.0
22	0.0	0.0	0.0	0.0	0.0	0.0	*****	0.0	0.0	0.0	0.0	0.0
23	0.0	0.0	0.0	0.0	0.0	0.0	*****	0.0	0.0	0.0	0.0	0.0
24	0.0	0.0	0.0	0.0	0.0	0.0	*****	0.0	0.0	0.0	0.0	0.0
25	0.0	2.0	1.0	1.0	1.0	0.0	*****	0.0	0.0	0.0	0.0	0.0
26	0.0	0.0	0.0	0.0	0.0	0.0	*****	0.0	0.0	0.0	0.0	0.0
27	0.0	0.0	0.0	0.0	1.0	0.0	*****	1.0	*****	1.0	0.0	0.0
28	0.0	0.0	0.0	0.0	0.0	0.0	*****	0.0	0.0	0.0	0.0	0.0
29	0.0	0.0	0.0	0.0	0.0	0.0	*****	0.0	0.0	0.0	0.0	0.0
30	0.0	0.0	0.0	0.0	0.0	0.0	*****	0.0	0.0	0.0	0.0	0.0
31	0.0	0.0	0.0	0.0	0.0	0.0	0.0	0.0	0.0	0.0	0.0	0.0

DAY	13	14	15	16	17	18	19	20	21	22	23	24
1	0.0	0.0	0.0	0.0	0.0	0.0	0.0	0.0	0.0	0.0	0.0	0.0
2	0.0	0.0	0.0	0.0	0.0	0.0	0.0	0.0	0.0	0.0	0.0	0.0
3	0.0	0.0	0.0	0.0	0.0	0.0	0.0	0.0	0.0	0.0	0.0	0.0
4	0.0	0.0	0.0	0.0	0.0	0.0	0.0	0.0	0.0	0.0	0.0	0.0
5	0.0	0.0	0.0	0.0	0.0	0.0	0.0	0.0	0.0	0.0	0.0	0.0
6	0.0	0.0	0.0	0.0	0.0	0.0	0.0	0.0	0.0	0.0	0.0	0.0
7	0.0	0.0	0.0	0.0	*****	0.0	0.0	0.0	0.0	0.0	0.0	0.0
8	0.0	0.0	0.0	0.0	0.0	0.0	0.0	0.0	0.0	0.0	0.0	0.0
9	0.0	0.0	0.0	0.0	0.0	0.0	0.0	0.0	0.0	0.0	0.0	0.0
10	0.0	0.0	0.0	0.0	0.0	0.0	0.0	0.0	0.0	0.0	0.0	0.0
11	0.0	0.0	0.0	0.0	0.0	0.0	0.0	0.0	0.0	0.0	0.0	0.0
12	0.0	0.0	0.0	0.0	0.0	0.0	0.0	0.0	0.0	0.0	0.0	0.0
13	0.0	0.0	0.0	0.0	0.0	0.0	0.0	0.0	0.0	0.0	0.0	0.0
14	0.0	0.0	0.0	0.0	0.0	0.0	0.0	0.0	0.0	0.0	0.0	0.0
15	0.0	0.0	0.0	0.0	0.0	0.0	0.0	0.0	0.0	0.0	0.0	0.0
16	0.0	0.0	0.0	0.0	0.0	0.0	0.0	0.0	0.0	0.0	0.0	0.0
17	0.0	0.0	0.0	0.0	0.0	0.0	0.0	0.0	0.0	0.0	0.0	0.0
18	0.0	0.0	0.0	0.0	0.0	0.0	0.0	0.0	0.0	0.0	0.0	0.0
19	0.0	0.0	0.0	0.0	0.0	0.0	0.0	0.0	0.0	0.0	0.0	0.0
20	0.0	0.0	0.0	0.0	0.0	0.0	0.0	0.0	0.0	0.0	0.0	0.0
21	0.0	0.0	0.0	0.0	0.0	0.0	0.0	0.0	0.0	0.0	0.0	0.0
22	0.0	0.0	0.0	0.0	0.0	0.0	0.0	0.0	0.0	0.0	0.0	0.0
23	0.0	0.0	0.0	0.0	0.0	0.0	0.0	0.0	0.0	0.0	0.0	0.0
24	0.0	0.0	0.0	0.0	0.0	0.0	0.0	0.0	0.0	0.0	0.0	0.0
25	0.0	0.0	0.0	0.0	0.0	0.0	0.0	0.0	0.0	0.0	0.0	0.0
26	0.0	0.0	0.0	0.0	0.0	0.0	0.0	0.0	0.0	0.0	0.0	0.0
27	0.0	0.0	0.0	0.0	0.0	0.0	0.0	0.0	0.0	0.0	0.0	0.0
28	0.0	0.0	0.0	0.0	0.0	0.0	0.0	0.0	0.0	0.0	0.0	0.0
29	0.0	0.0	0.0	0.0	0.0	0.0	0.0	0.0	0.0	0.0	0.0	2.0
30	0.0	0.0	0.0	0.0	0.0	0.0	0.0	0.0	0.0	0.0	1.0	0.0
31	0.0	0.0	0.0	0.0	0.0	0.0	0.0	0.0	0.0	0.0	0.0	0.0

HYDROGEN SULFIDE (H2S) S050

FREQUENCY DISTRIBUTION TABLES

MONTH AUG. 84

PERCENT OF READINGS WITH WIND DIRECTION

WIND DIRECTION	POLLUTANT OCC. HOURS	FREQUENCY OF OCCURRENCE %
N	3	9.7
NE	3	9.7
E	3	9.7
SE	0	0.0
S	4	12.9
SW	5	16.1
W	9	29.0
NW	3	9.7
CALM	1	3.2
INOP	0	0.0

FREQUENCY OF READINGS WITH WIND DIRECTION

WIND DIRECTION	HOURS OF WIND OCCURRENCE	HOURS OF READINGS	FREQUENCY OF READINGS WITH WIND
N	71	3	4.2
NE	48	3	6.3
E	67	3	4.5
SE	50	0	0.0
S	85	4	4.7
SW	81	5	6.2
W	181	9	5.0
NW	117	3	2.6
CALM	12	1	8.3
INOP	0	0	0.0

NOTE.1. READINGS CONSIDERED IN FREQUENCY DISTRIBUTION TABLES ARE THOSE GREATER THAN 0.0001 PPB

2. VALUE OF ****** INDICATES NO DATA AVAILABLE OR INSUFFICIENT DATA

3. WIND DATA UTILIZED FOR CORRELATION PURPOSES WAS MONITORED AT ST ALBERT S050

APPENDIX B1

Static Monitoring Monthly Data

ALBERTA ENVIRONMENT

DIVISION OF POLLUTION CONTROL

ST. ALBERT

LOCATION 204 YEAR 1984 MONTH APR.

HYDROGEN SULFIDE EXPRESSED AS SO3 EQUIV.MG./DAY/100 SQ.CM.

STATION	HYDROGEN SULFIDE
1	0.003
2	0.003

SULFUR DIOXIDE EXPRESSED AS SO3 EQIV.MG./DAY/100 SQ.CM.

STATION	TOTAL SULFATION
1	0.032
2	0.0

TOTAL SULFATION WAS MEASURED USING A SULFATION PLATE

* NOTE. *******INDICATES NO VALUES ARE AVAILABLE

ALBERTA ENVIRONMENT

DIVISION OF POLLUTION CONTROL

ST. ALBERT

LOCATION 204 YEAR 1984 MONTH MAY

HYDROGEN SULFIDE EXPRESSED AS SO3 EQUIV.MG./DAY/100 SQ.CM.

STATION	HYDROGEN SULFIDE
1	0.0
2	0.0

SULFUR DIOXIDE EXPRESSED AS SO3 EQIV.MG./DAY/100 SQ.CM.

STATION	TOTAL SULFATION
1	0.119
2	0.012

TOTAL SULFATION WAS MEASURED USING A SULFATION PLATE

* NOTE. *******INDICATES NO VALUES ARE AVAILABLE

ALBERTA ENVIRONMENT

DIVISION OF POLLUTION CONTROL

ST. ALBERT

LOCATION 204 YEAR 1984 MONTH MAR.

HYDROGEN SULFIDE EXPRESSED AS SO3 EQUIV.MG./DAY/100 SQ.CM.

STATION	HYDROGEN SULFIDE
1	0.009
2	0.006

SULFUR DIOXIDE EXPRESSED AS SO3 EQIV.MG./DAY/100 SQ.CM.

STATION	TOTAL SULFATION
1	0.030
2	0.0

TOTAL SULFATION WAS MEASURED USING A SULFATION PLATE

* NOTE. *******INDICATES NO VALUES ARE AVAILABLE

ALBERTA ENVIRONMENT

DIVISION OF POLLUTION CONTROL

ST. ALBERT

LOCATION 204 YEAR 1984 MONTH JUN.

HYDROGEN SULFIDE EXPRESSED AS SO3 EQUIV.MG./DAY/100 SQ.CM.

STATION	HYDROGEN SULFIDE
1	0.010
2	0.007

SULFUR DIOXIDE EXPRESSED AS SO3 EQIV.MG./DAY/100 SQ.CM.

STATION	TOTAL SULFATION
1	0.023
2	0.014

TOTAL SULFATION WAS MEASURED USING A SULFATION PLATE

* NOTE. *******INDICATES NO VALUES ARE AVAILABLE